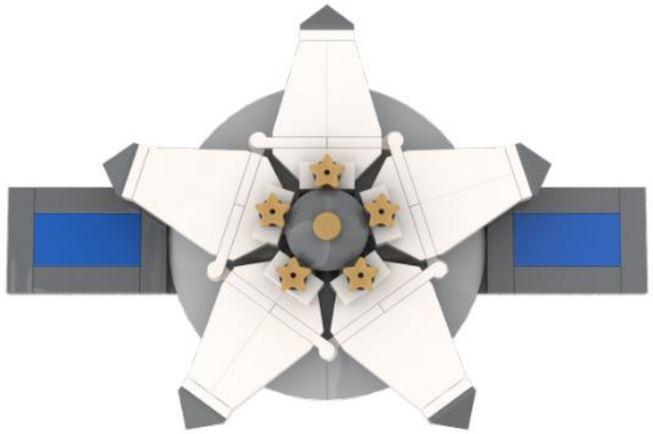

NK CUSTOM BRICKS
MICRO WARBIRDS
- C-5 GALAXY

Designed by: Nicholas Kramer 2020

WWW.NKCUSTOMBRICKS.COM

LEGO is a trademark of The Lego Group, which does not sponsor, authorize or endorse this product.

The C-5 GALAXY aircraft is manufactured and a trademark of Lockheed Martin, which does not sponsor, authorize or endorse this product.

1

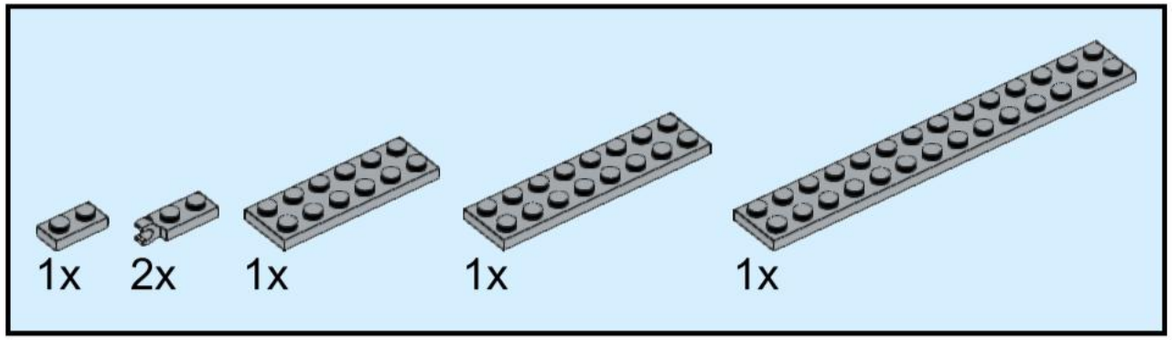

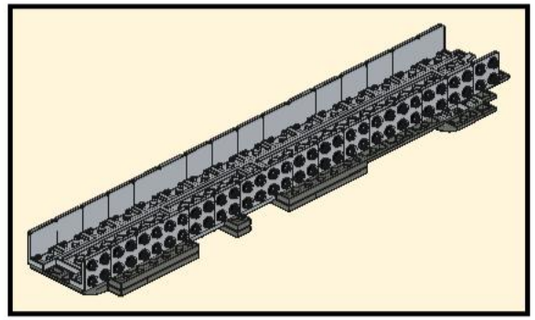

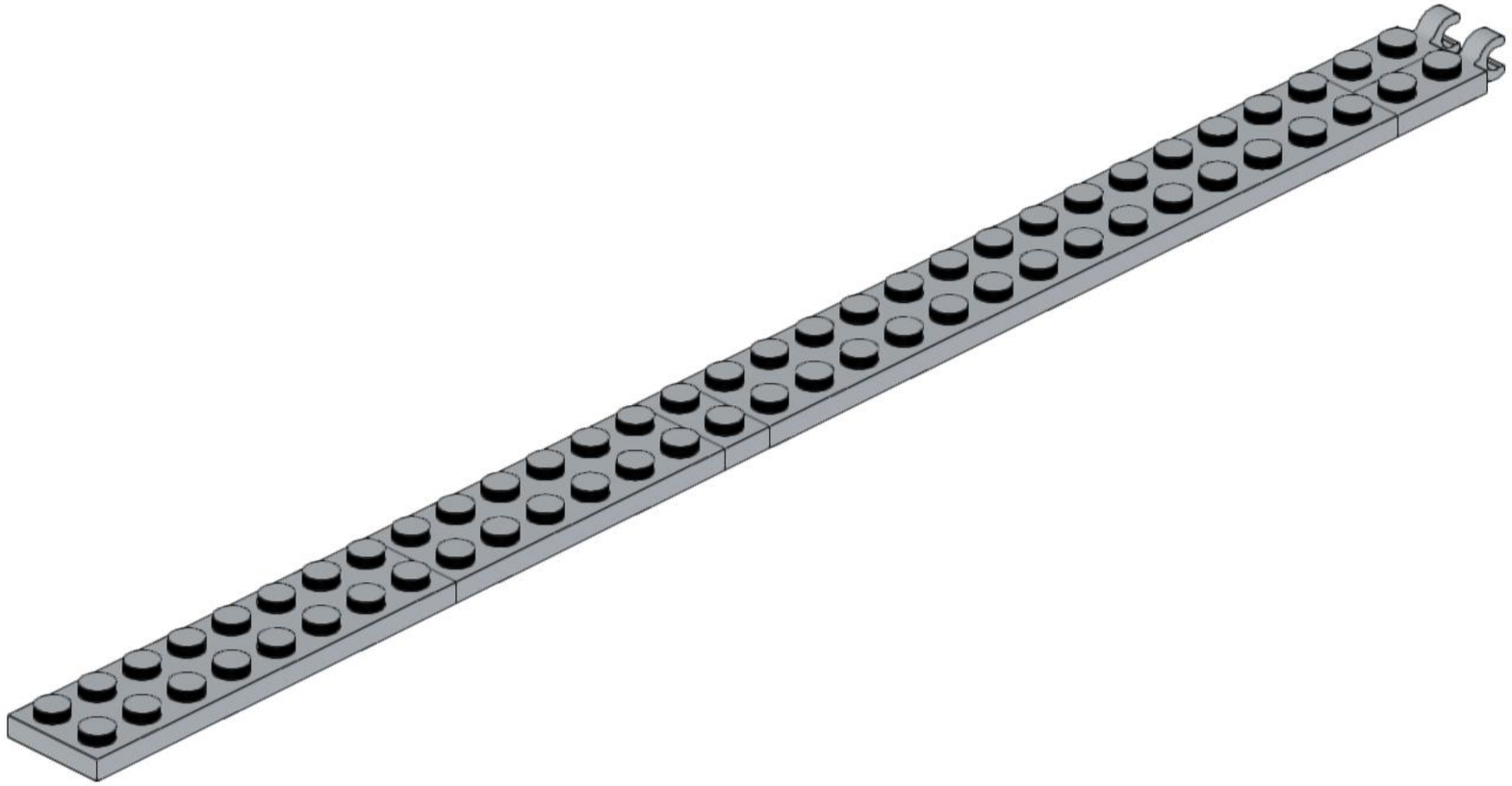

2

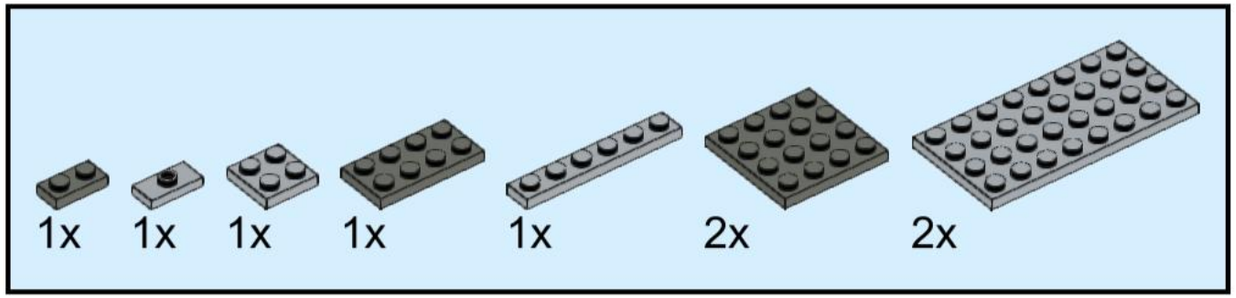

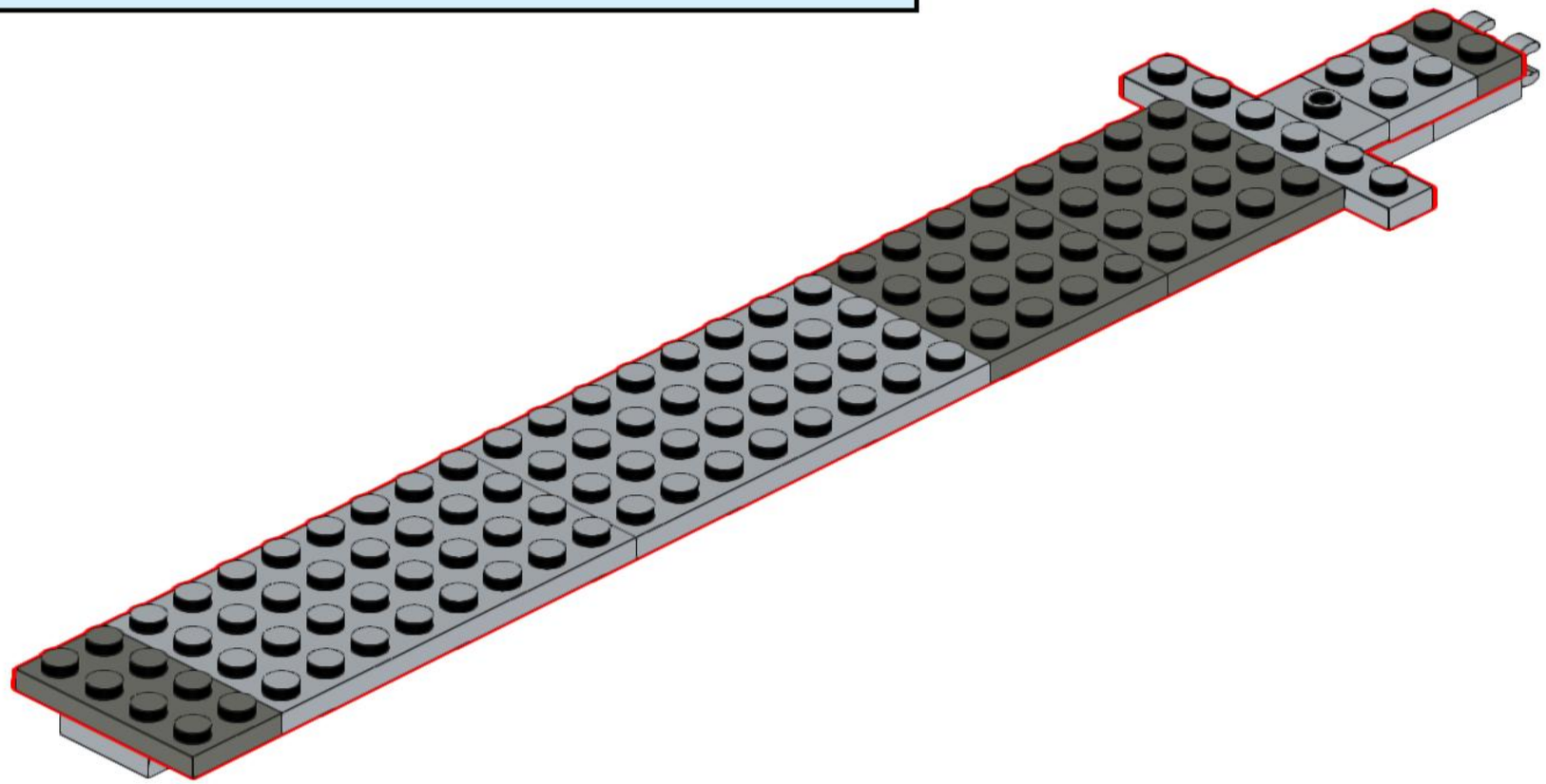

3

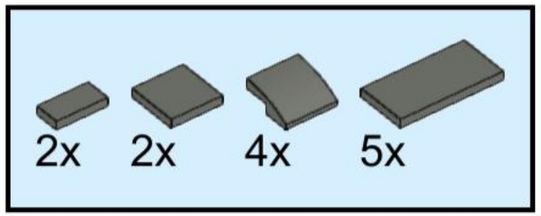

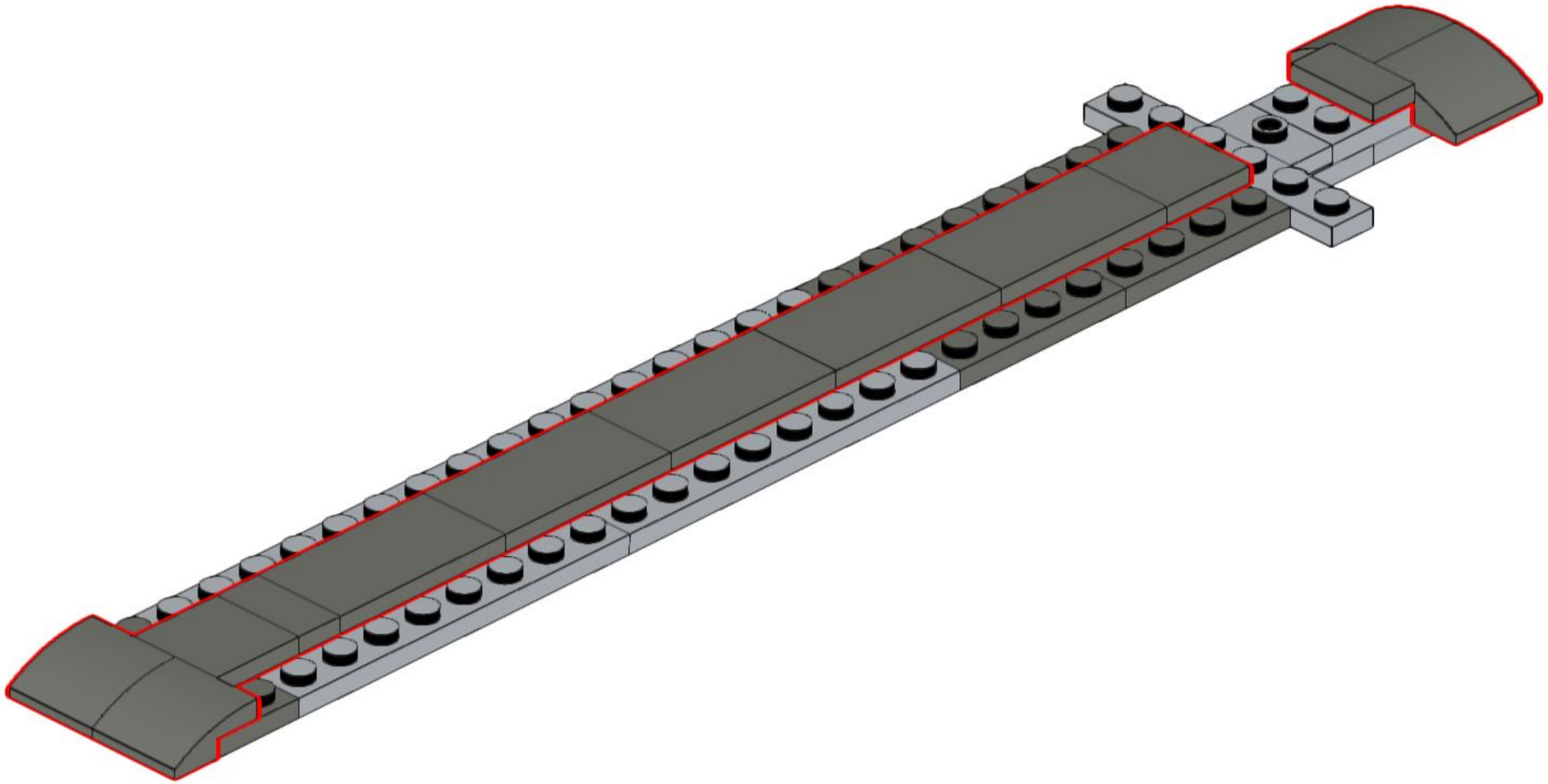

4

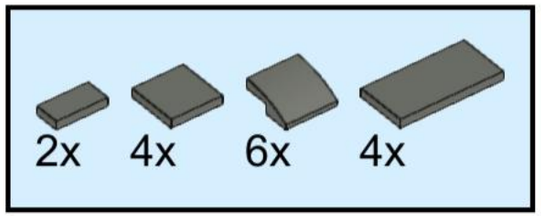

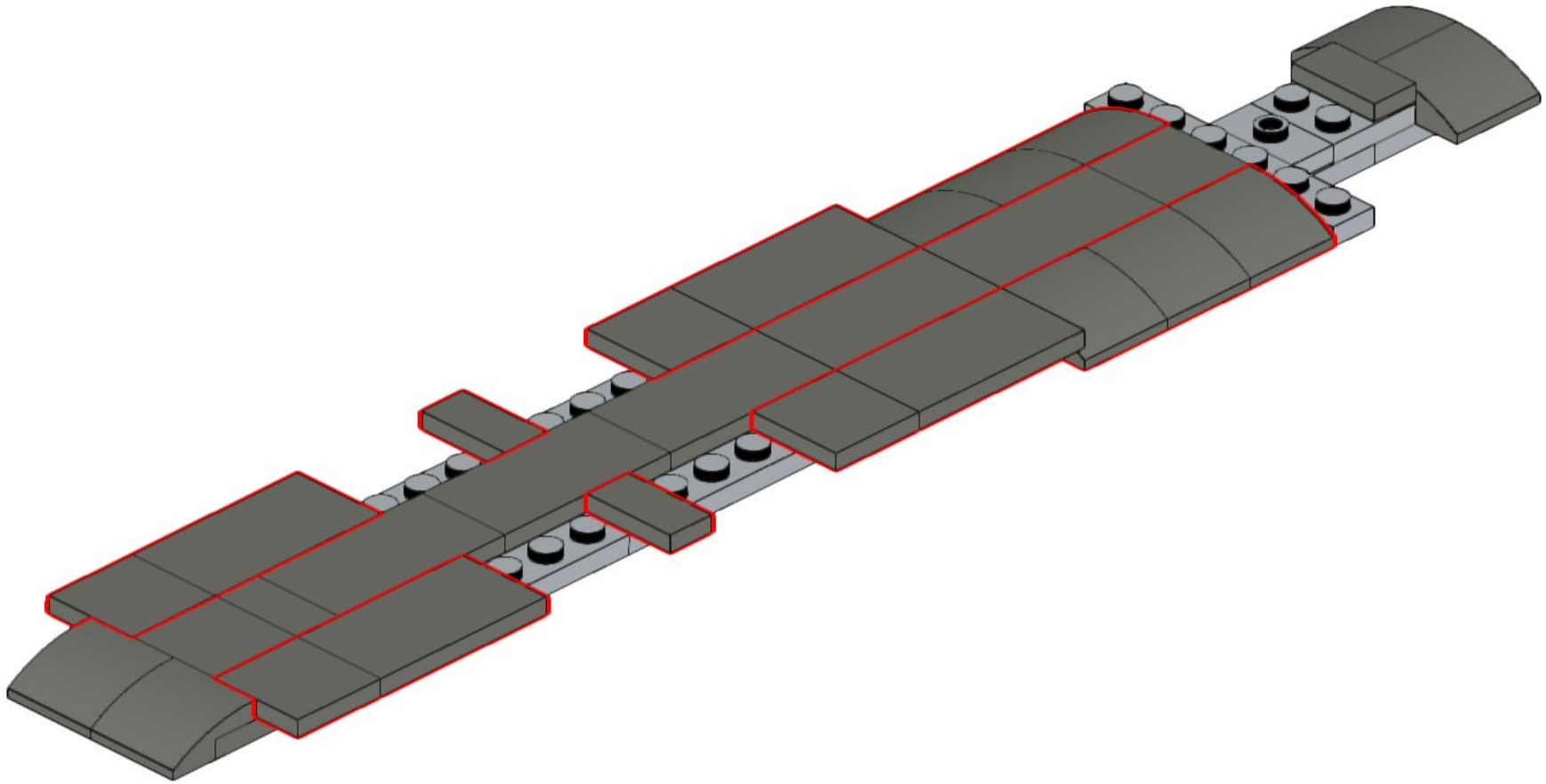

5

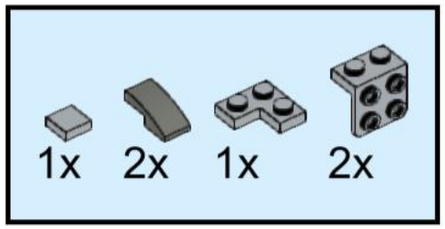

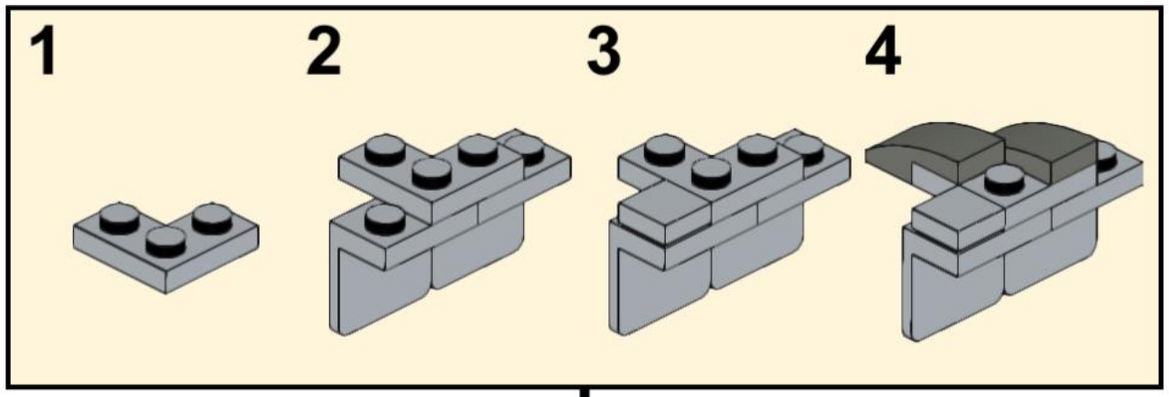

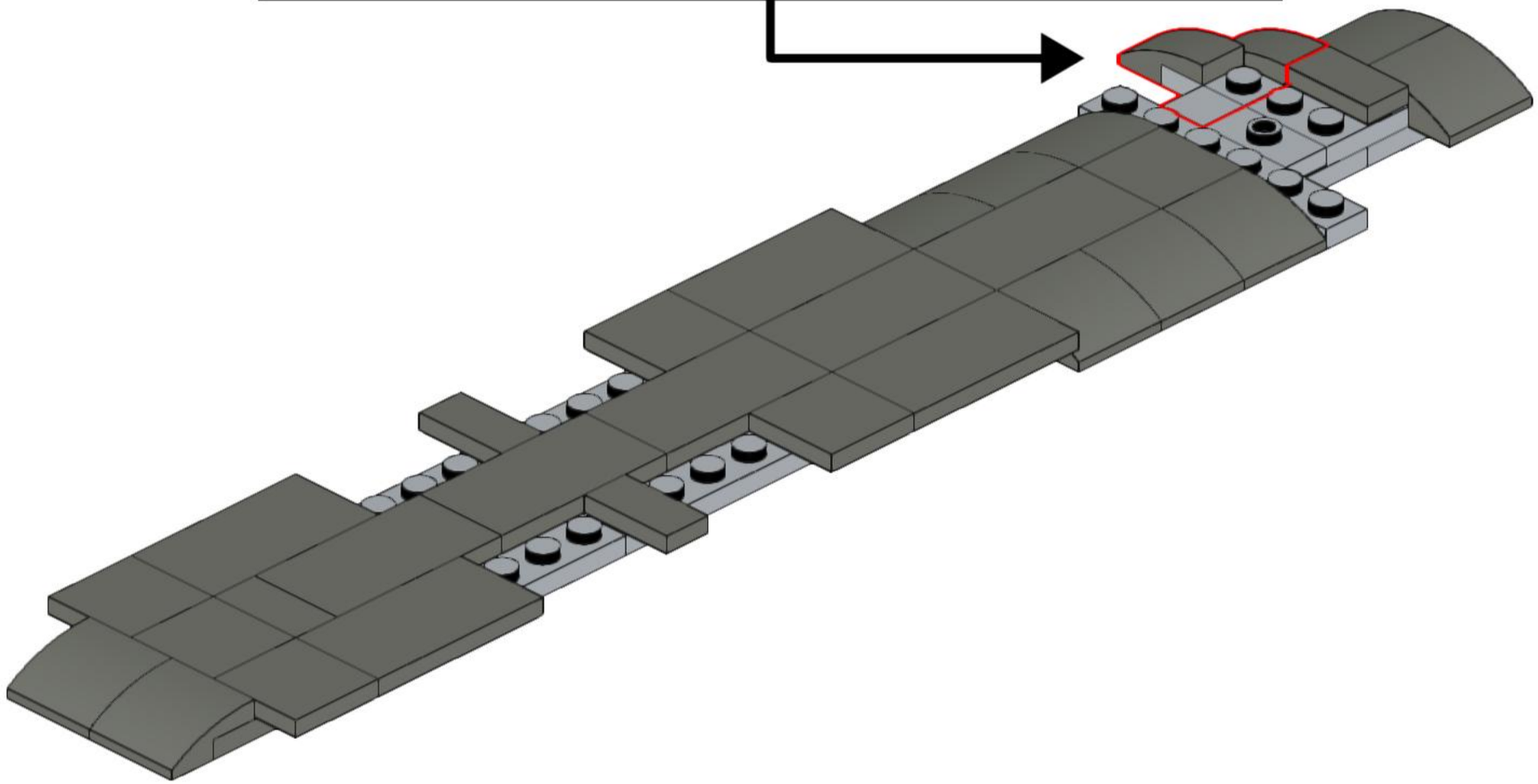

6

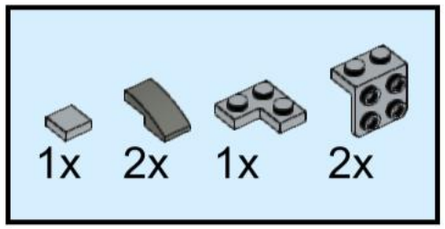

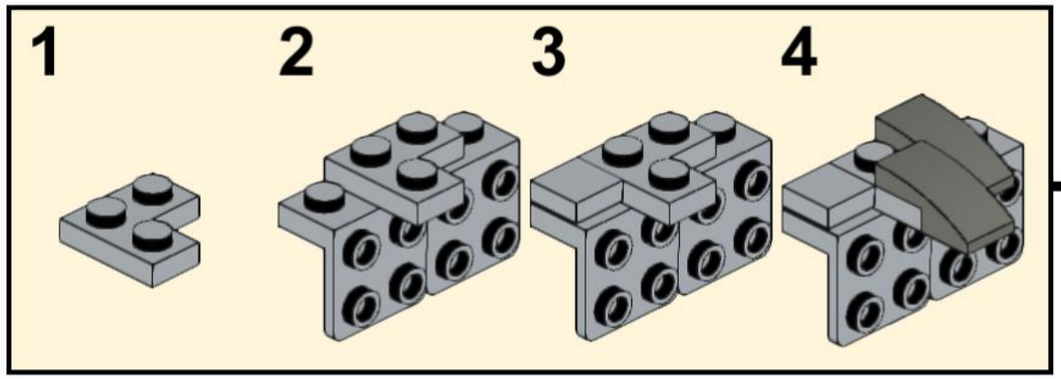

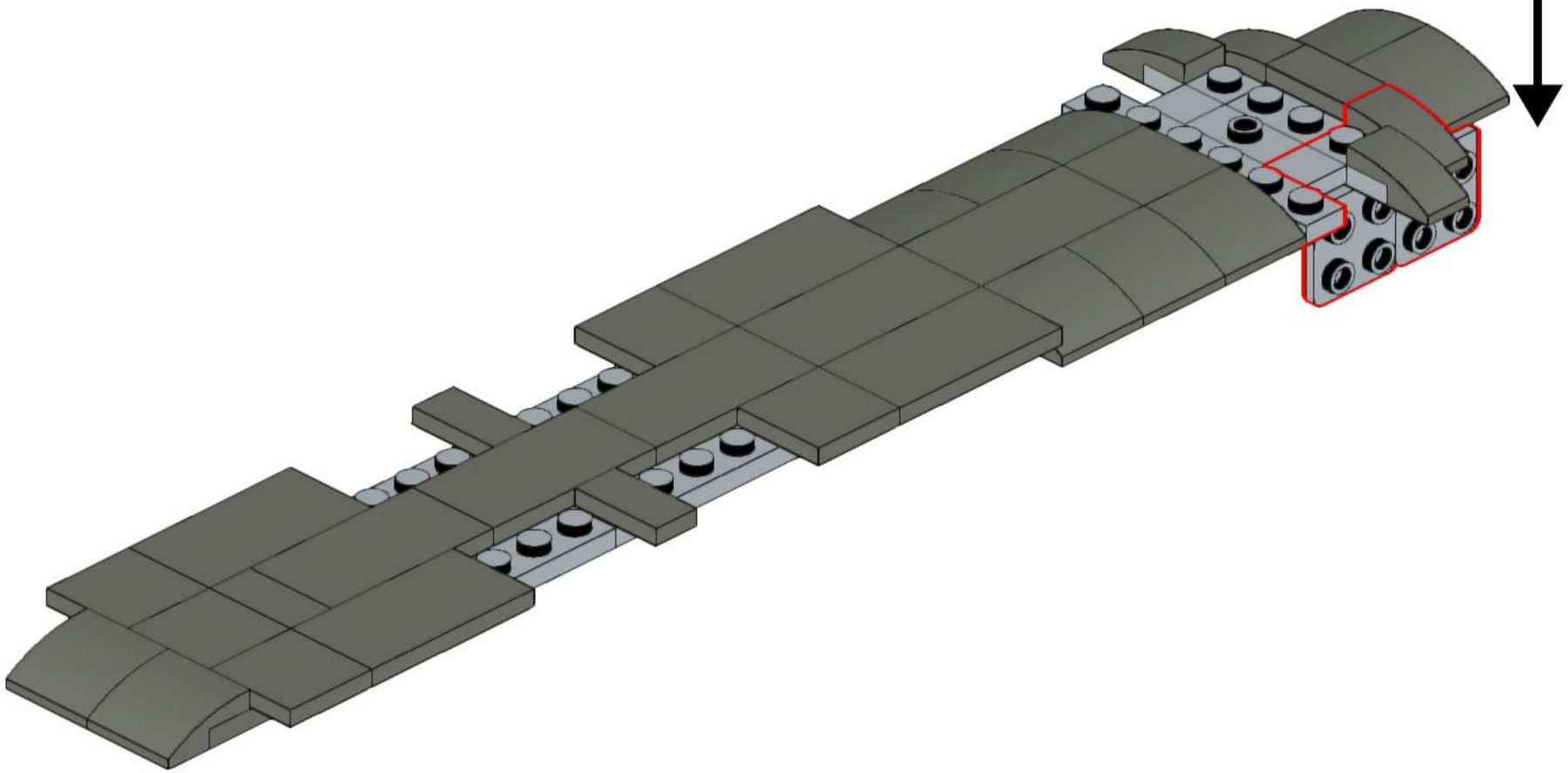

7

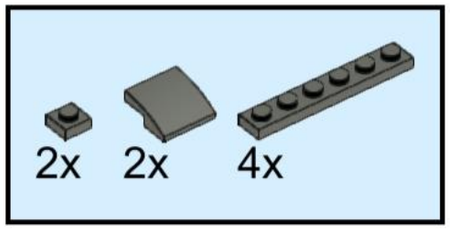

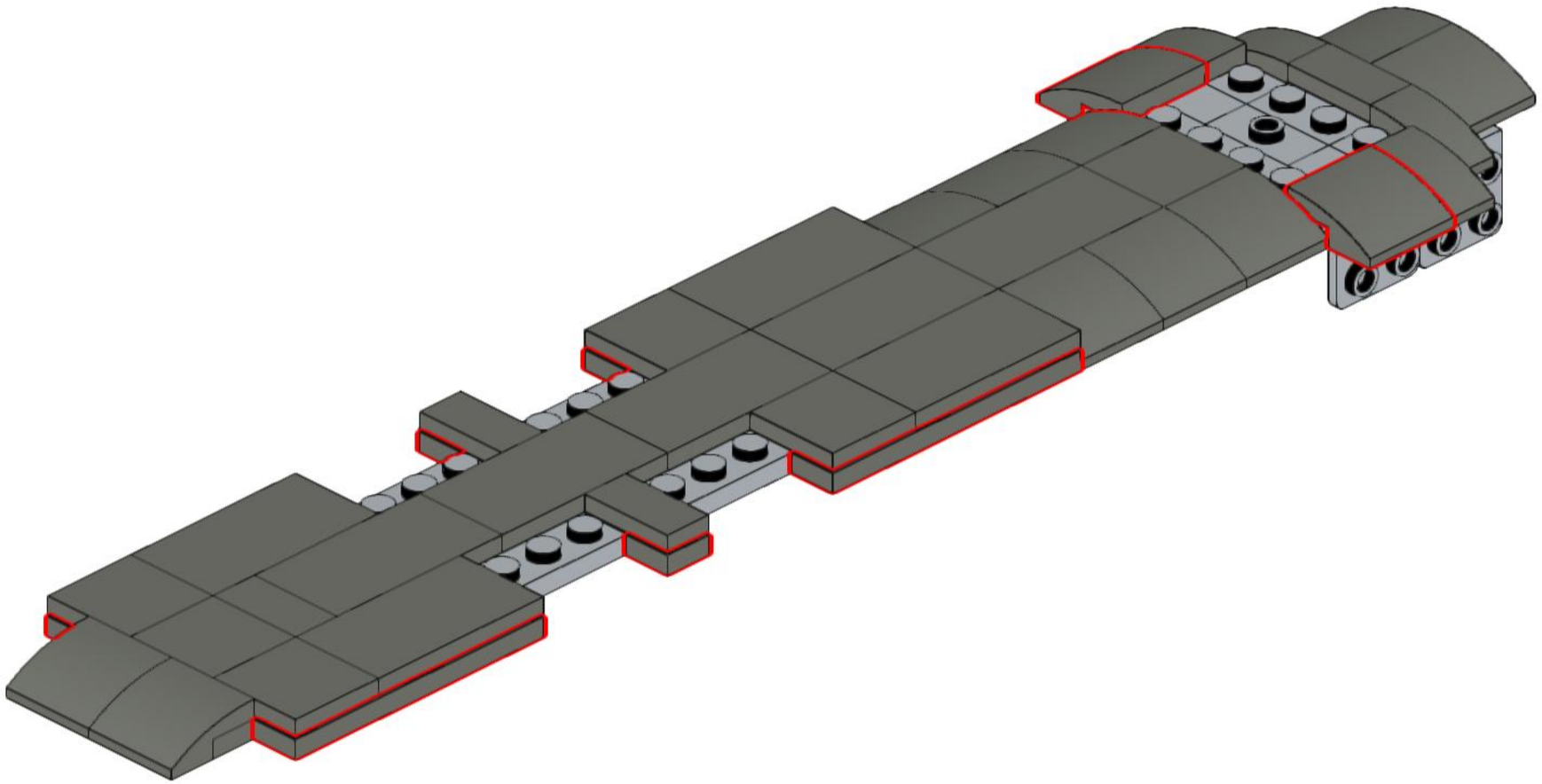

8

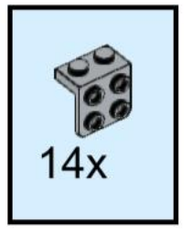

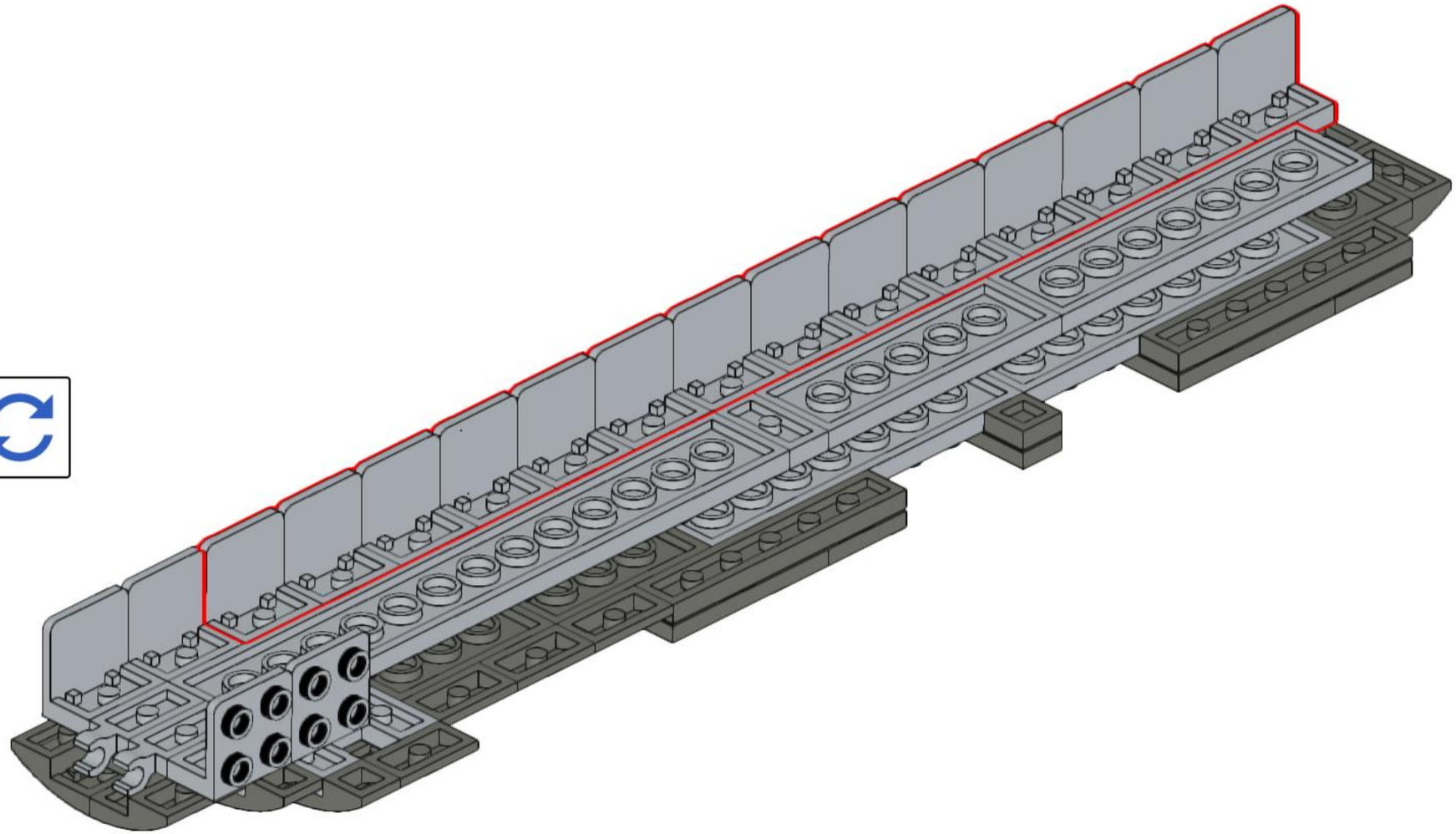

9

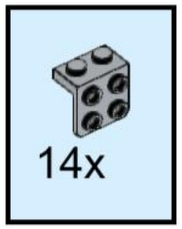

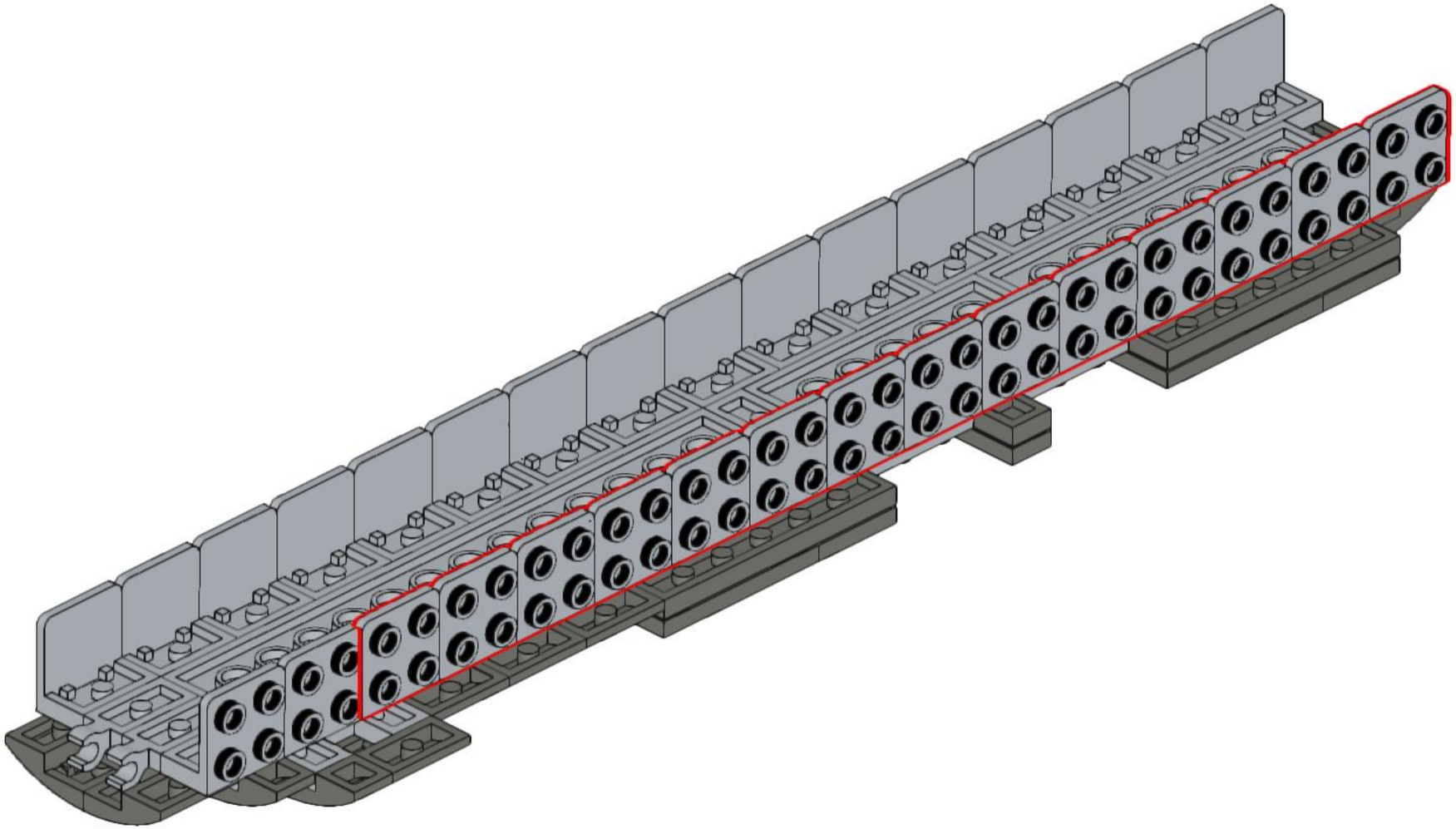

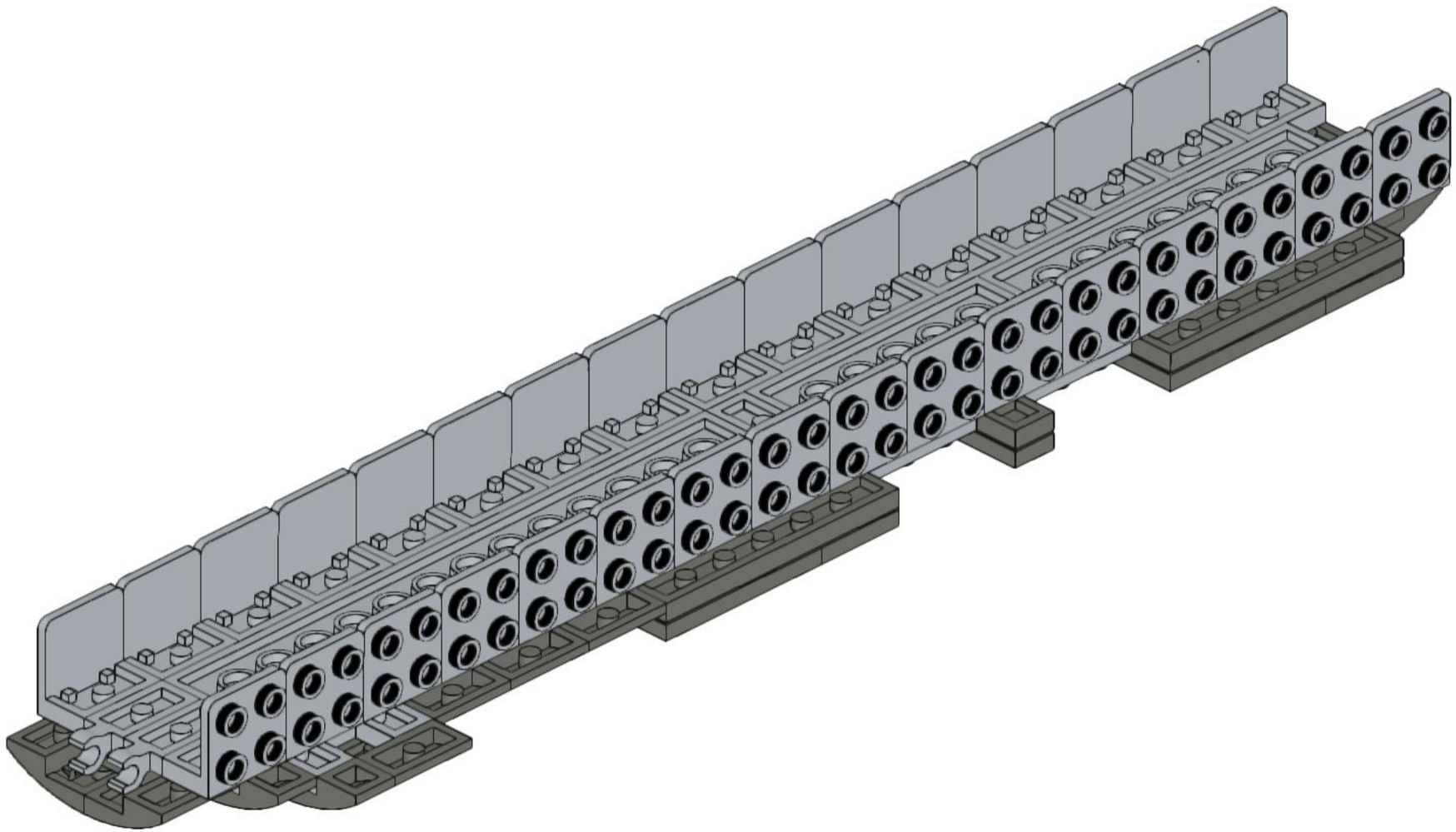

11

Cargo Bay Support - ANY COLOR

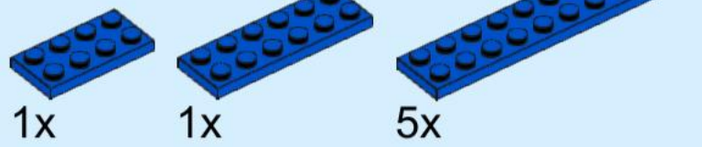

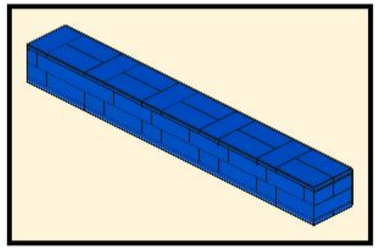

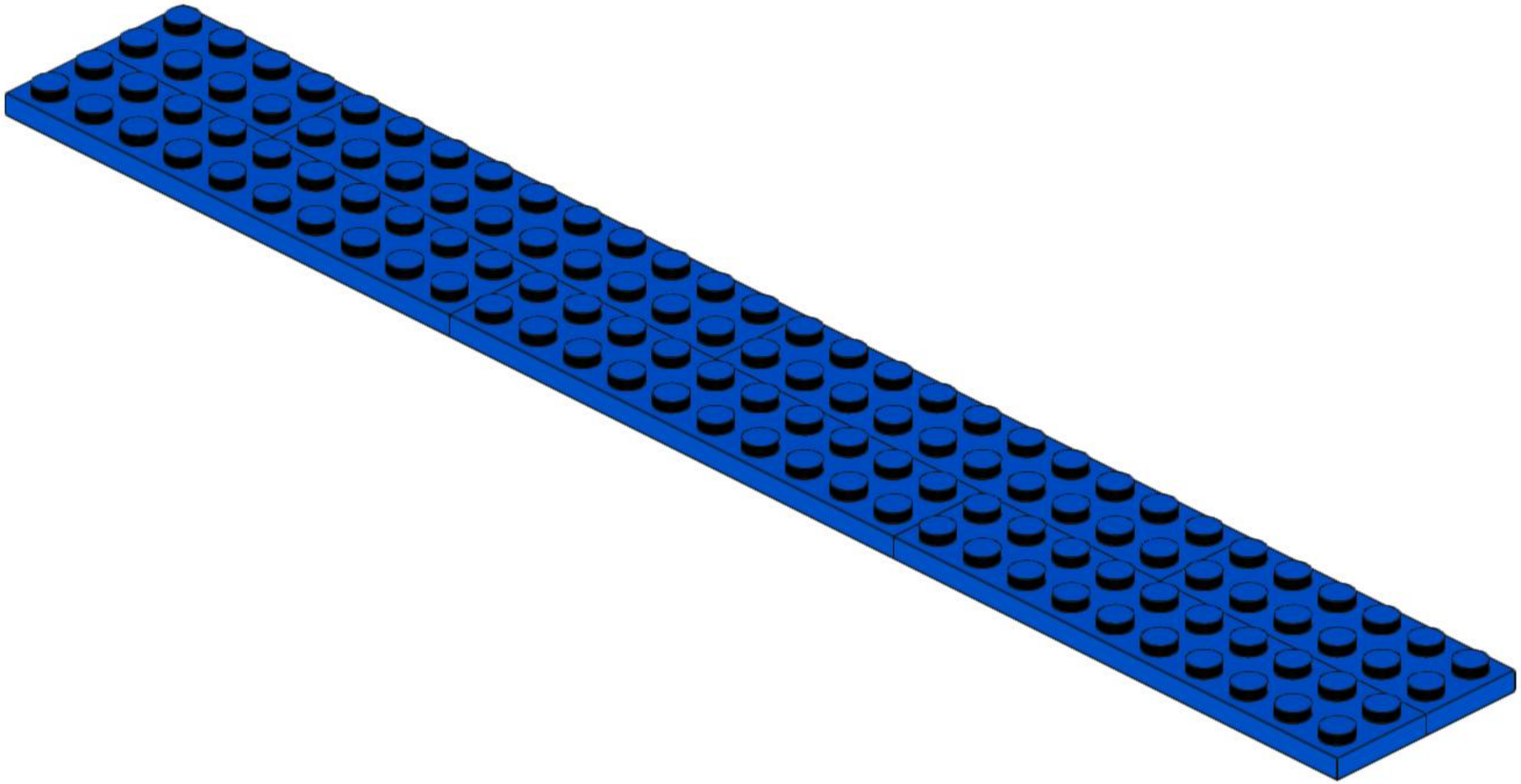

12

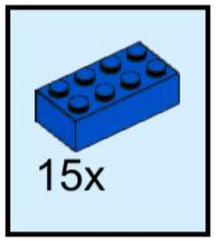

Cargo Bay Support - ANY COLOR

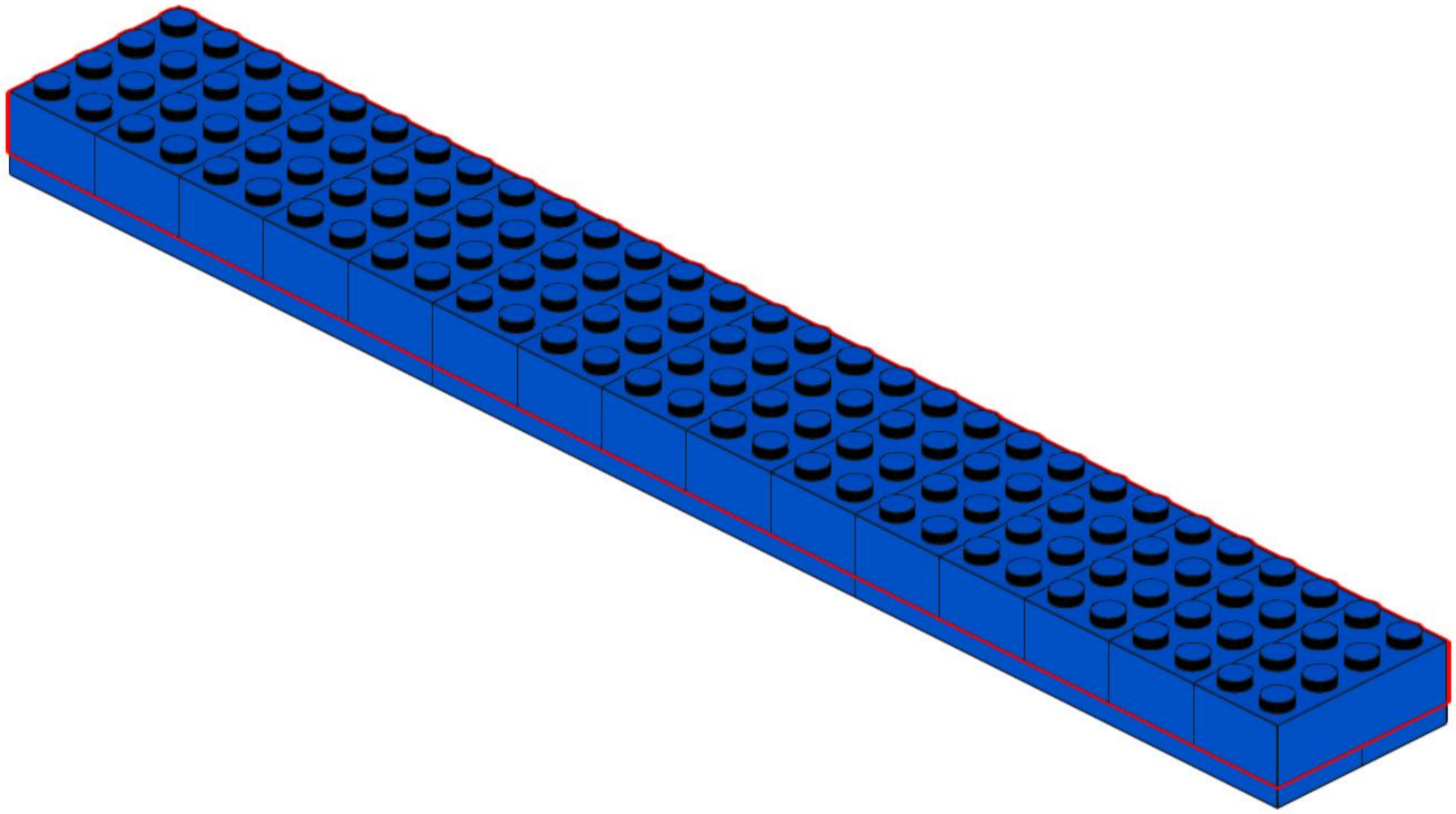

13

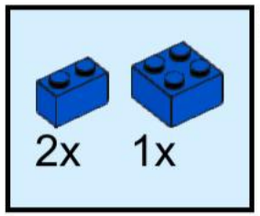

Cargo Bay Support - ANY COLOR

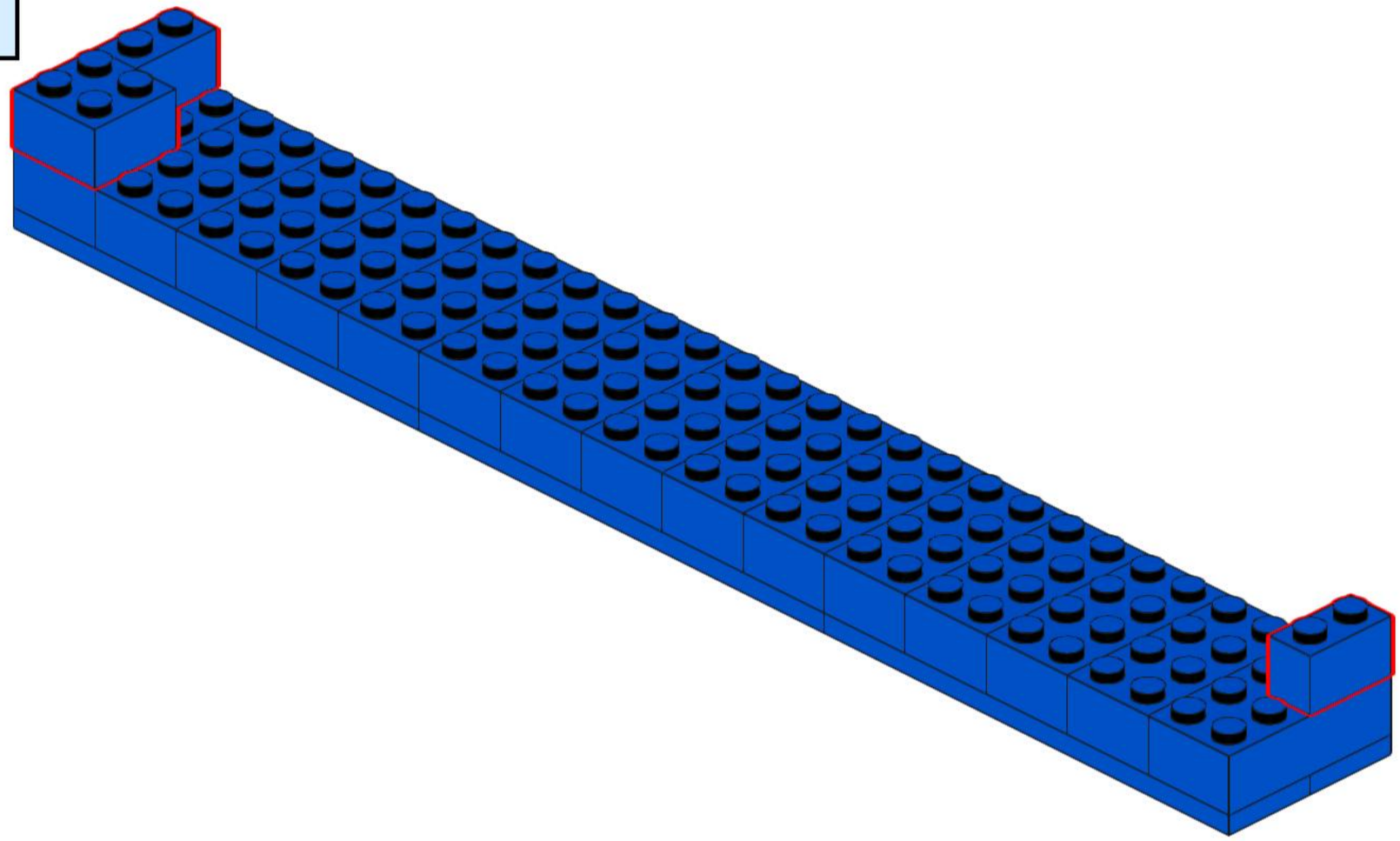

14

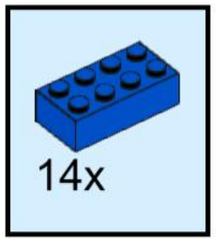

Cargo Bay Support - ANY COLOR

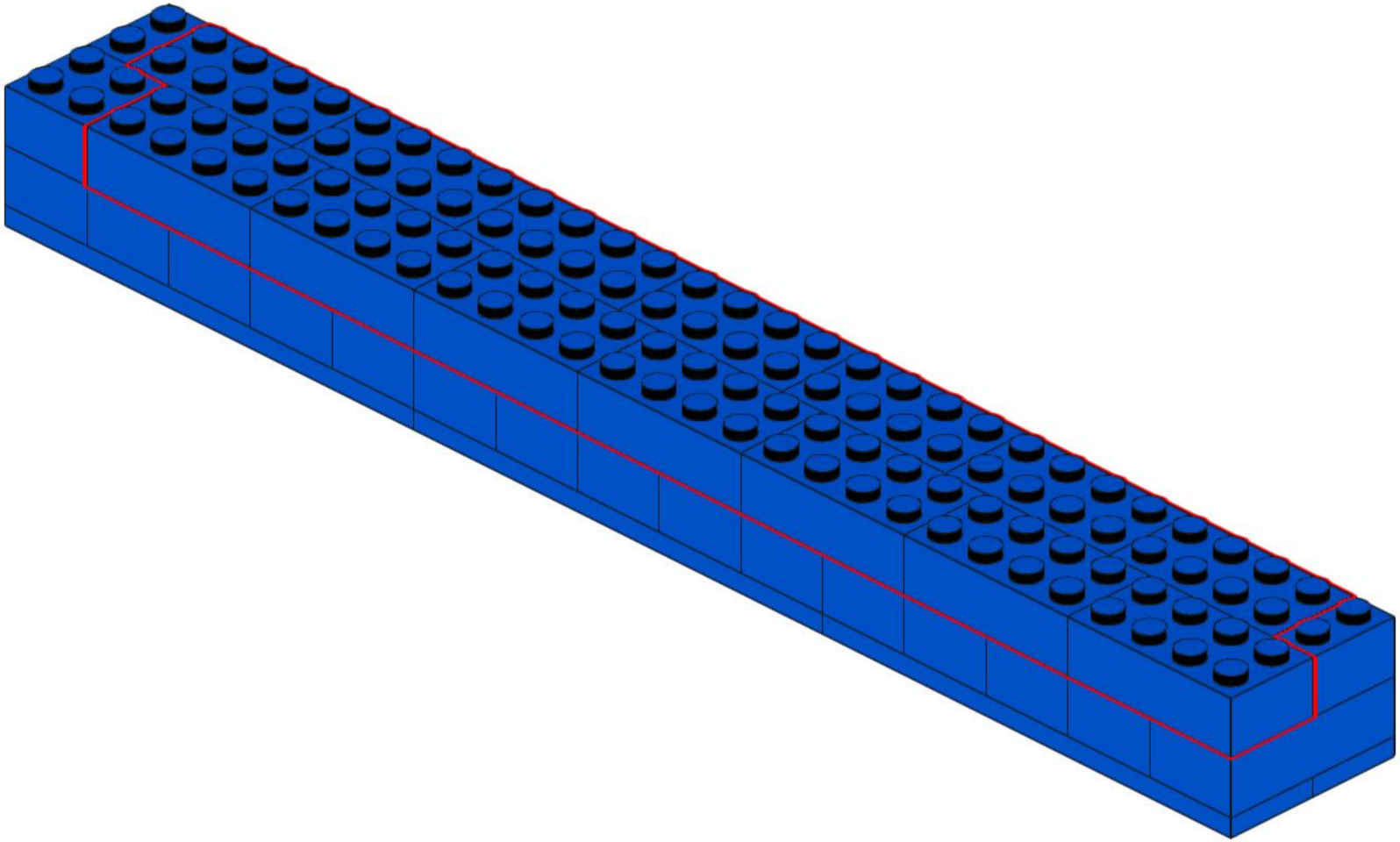

15

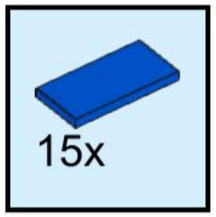

Cargo Bay Support - ANY COLOR

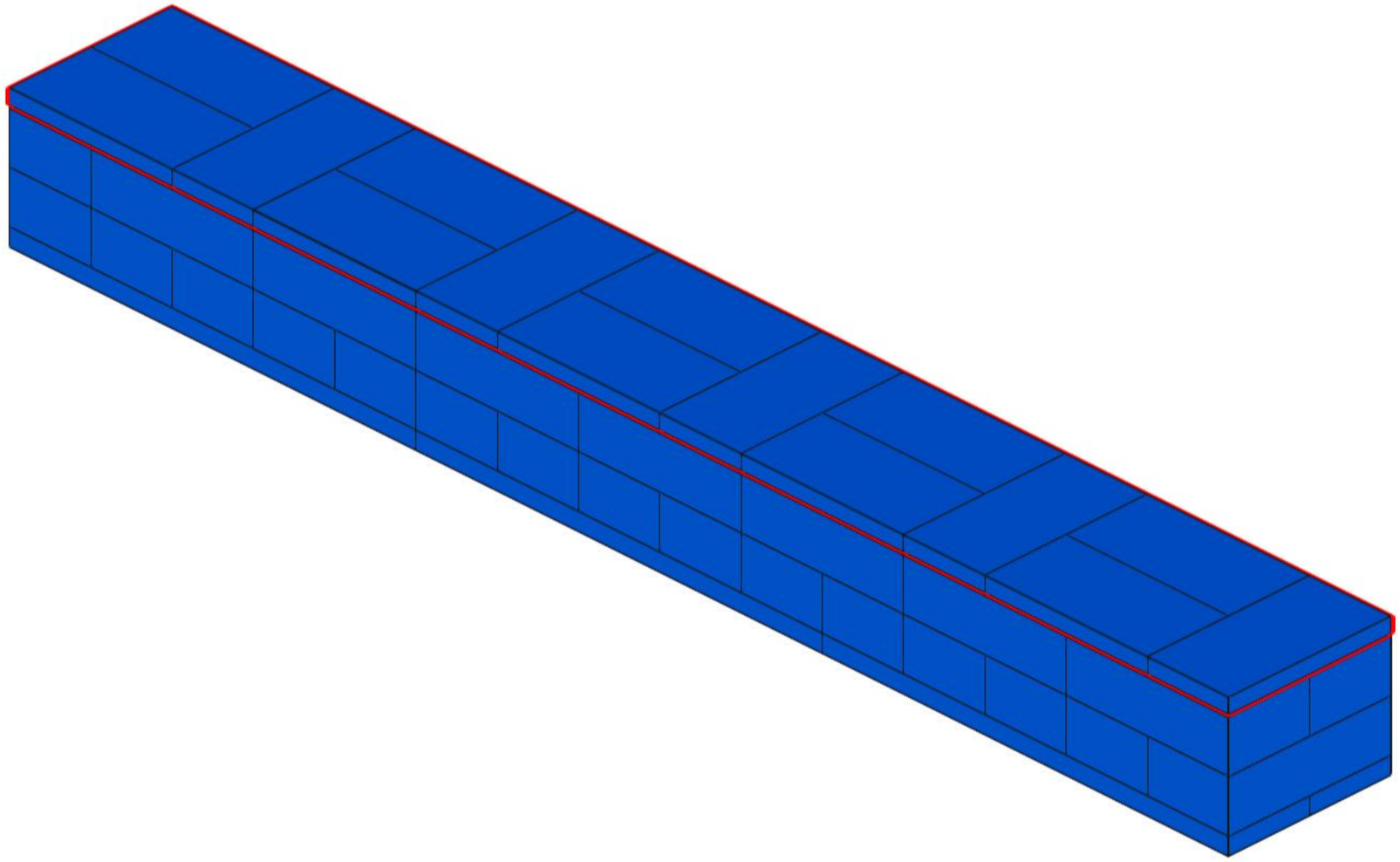

IMPORTANT!!! ENSURE ALL PIECES ARE TIGHT / FLUSH.

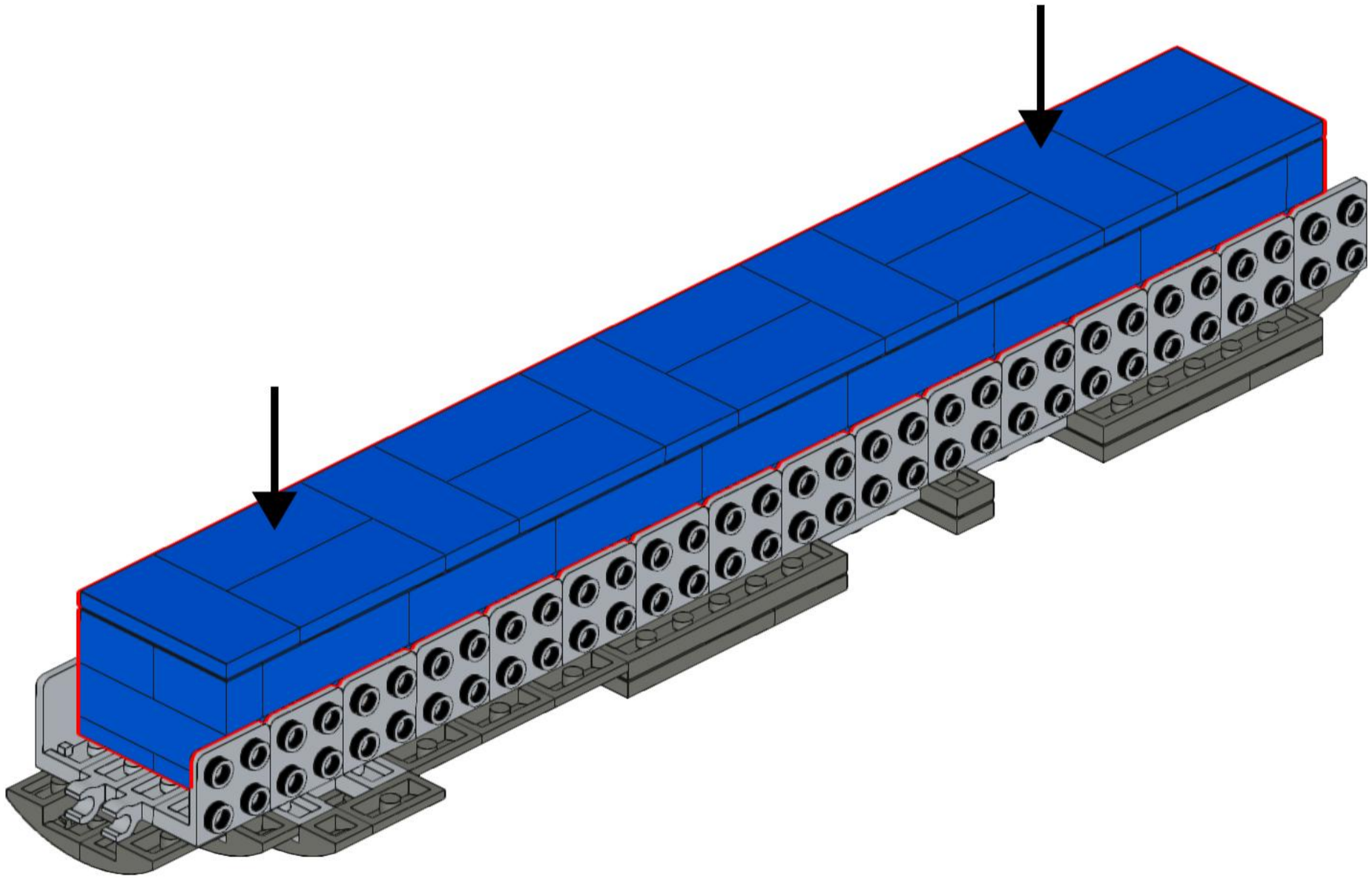

17

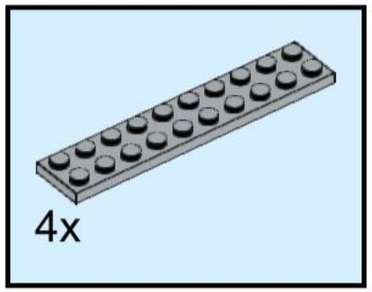

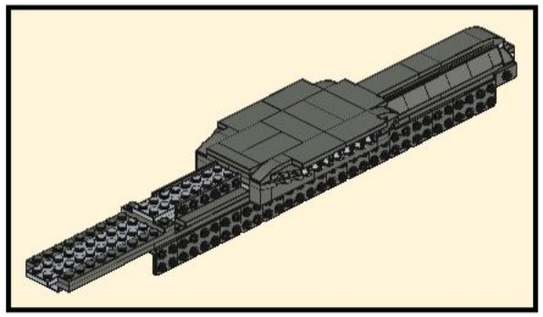

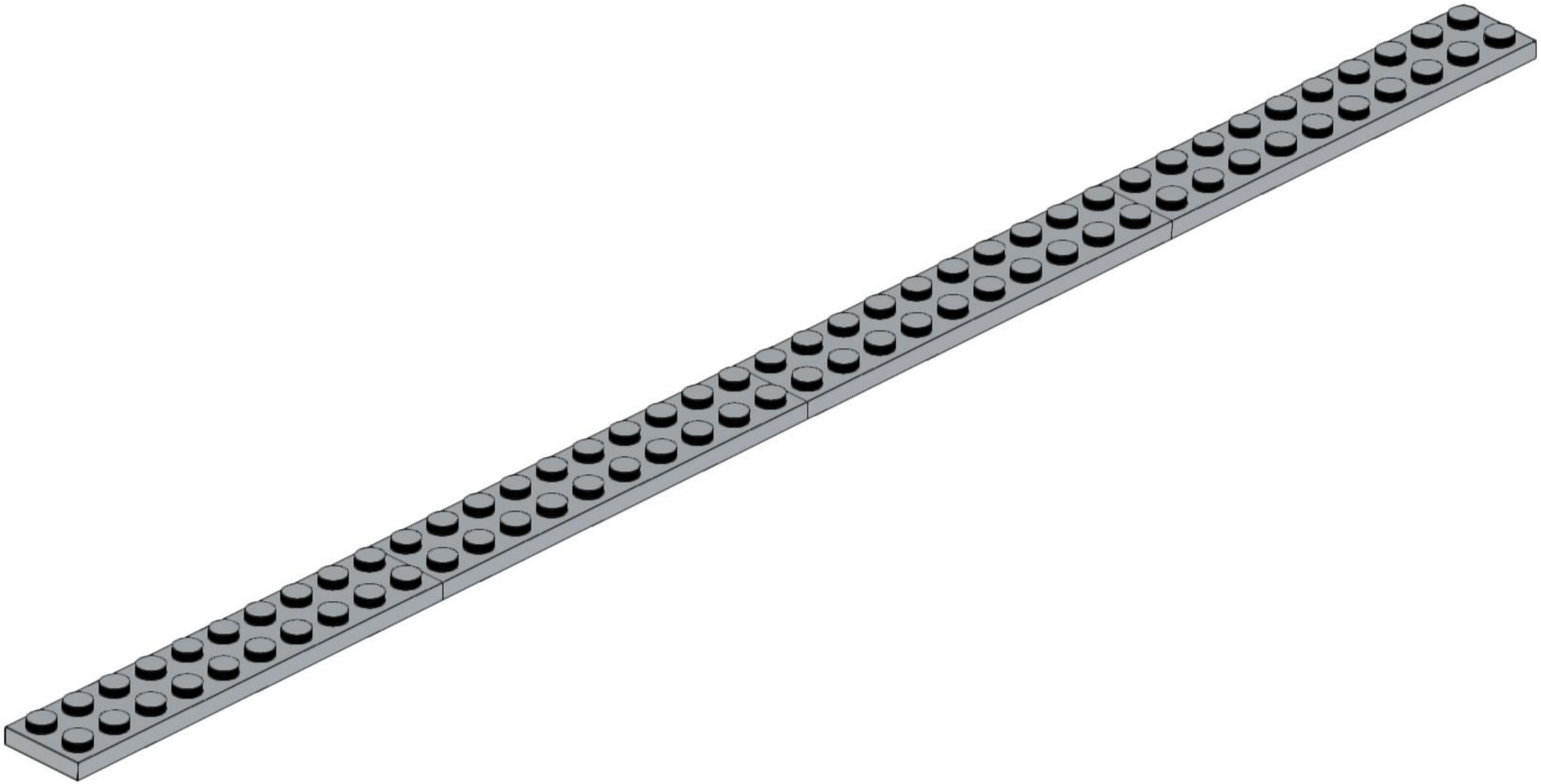

18

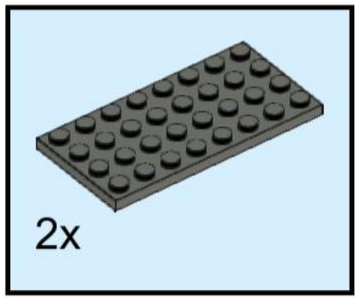

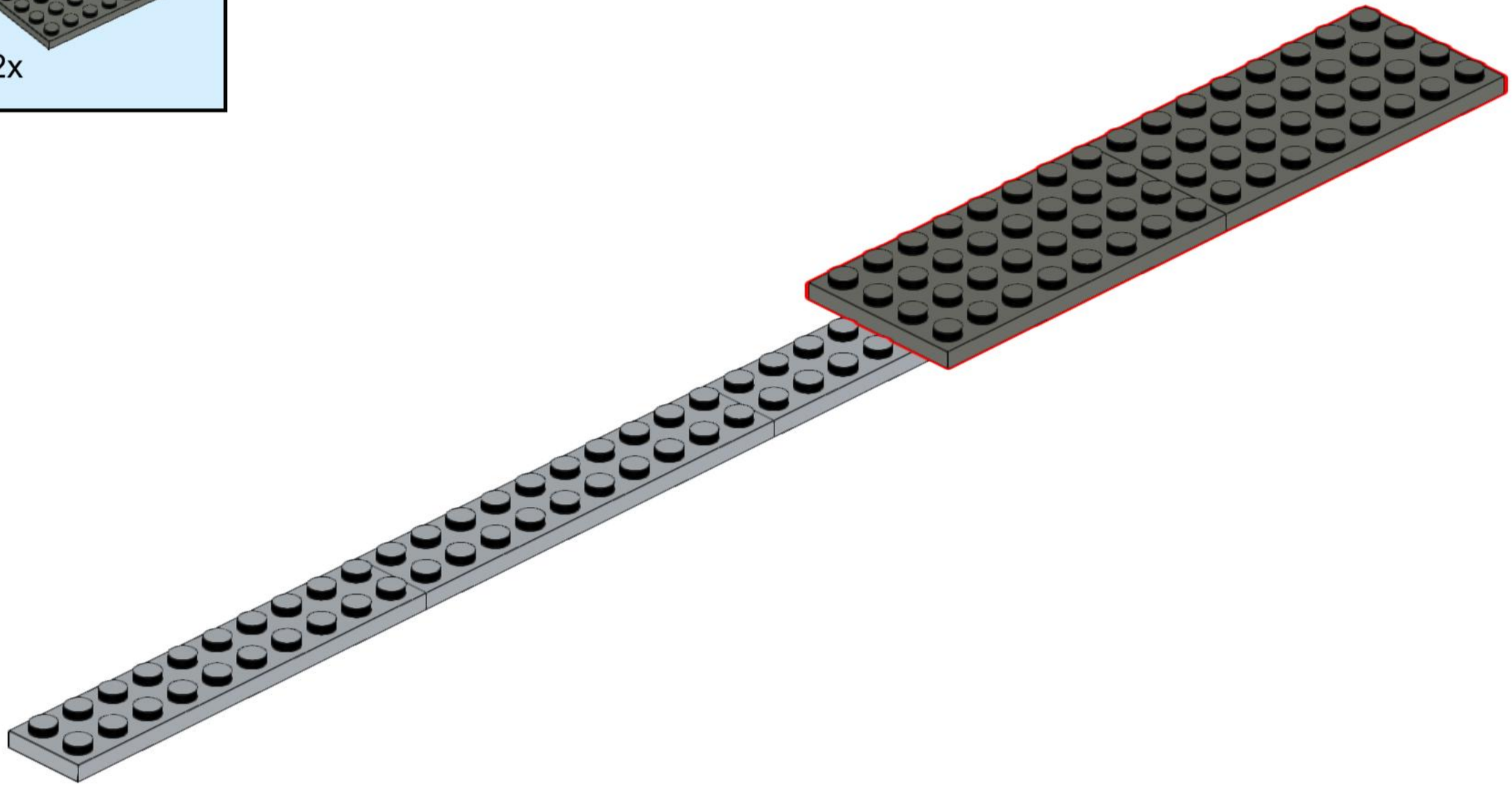

19

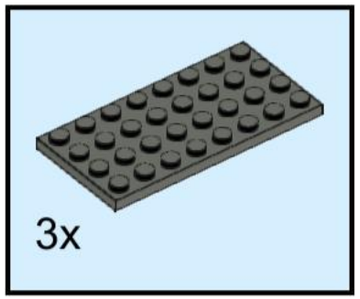

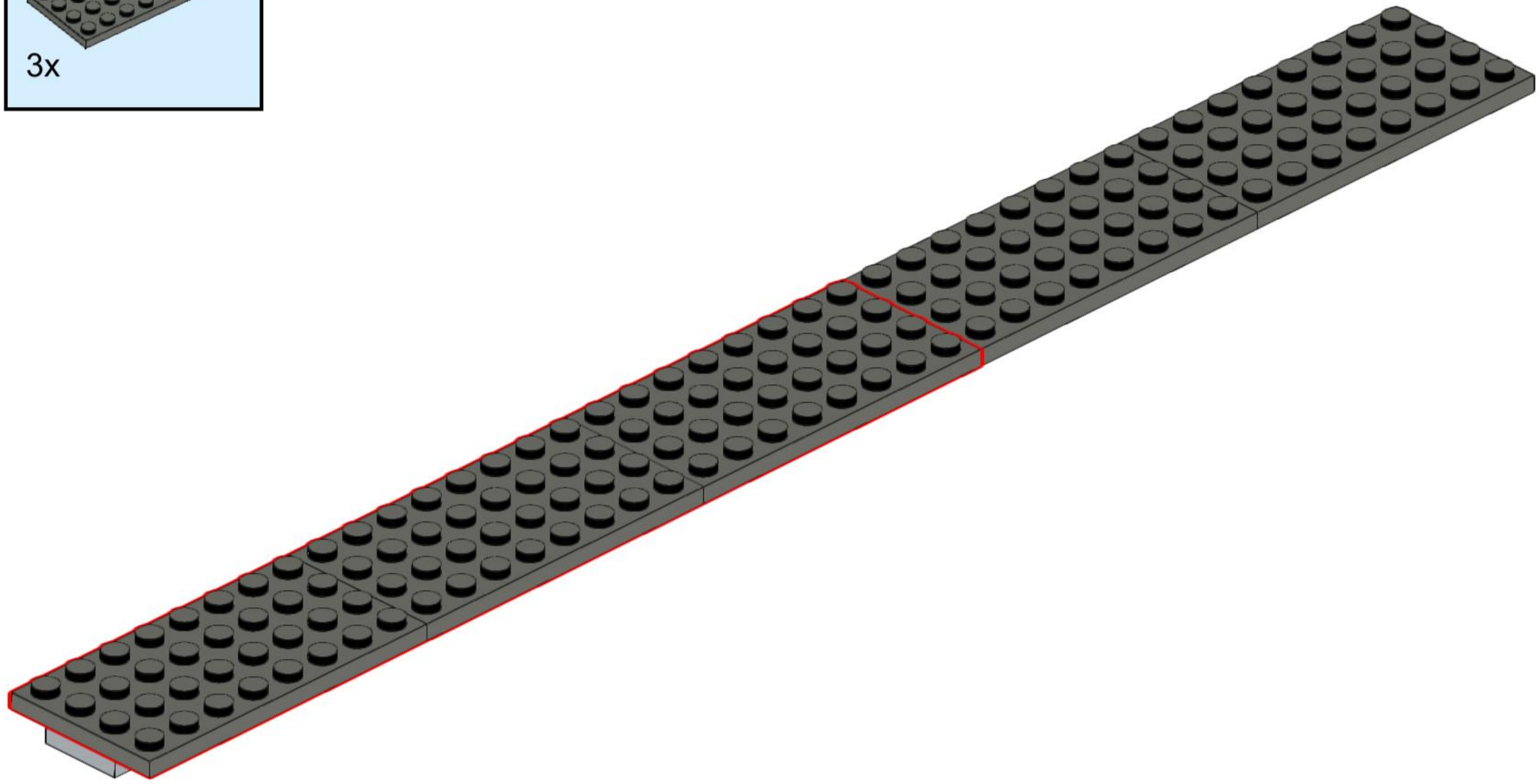

20

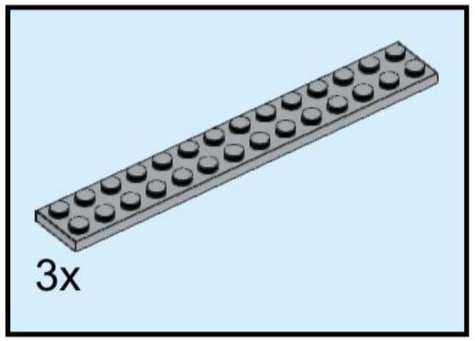

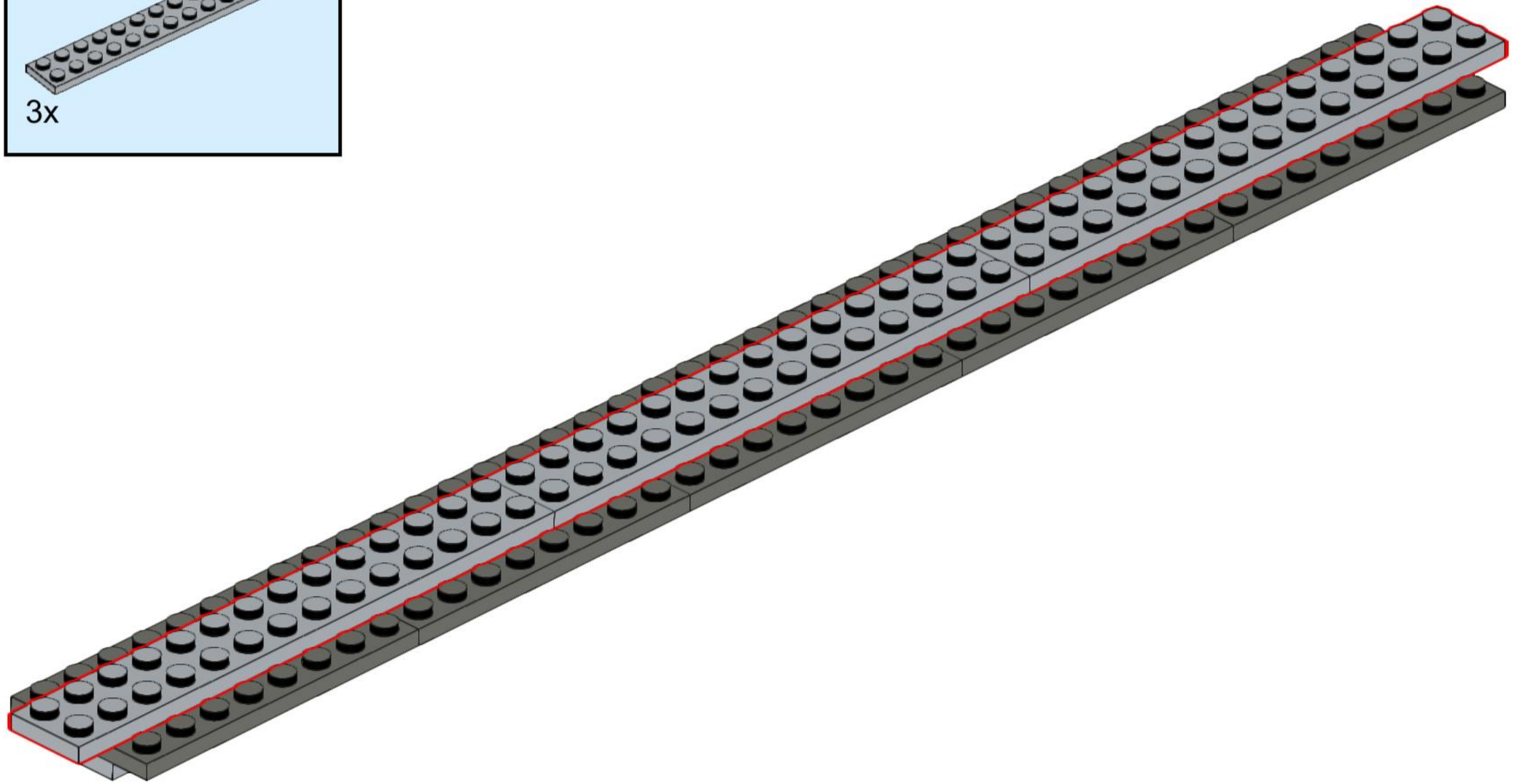

21

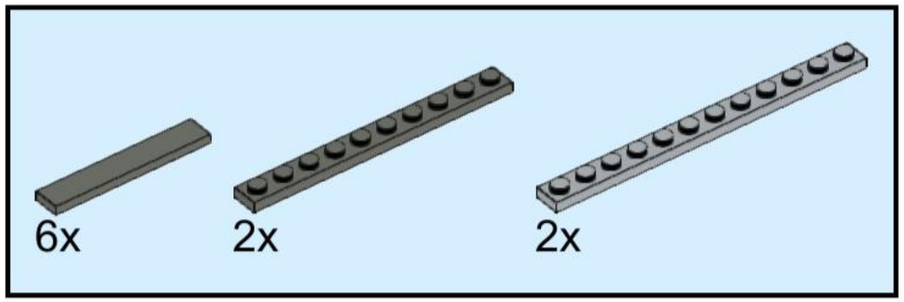

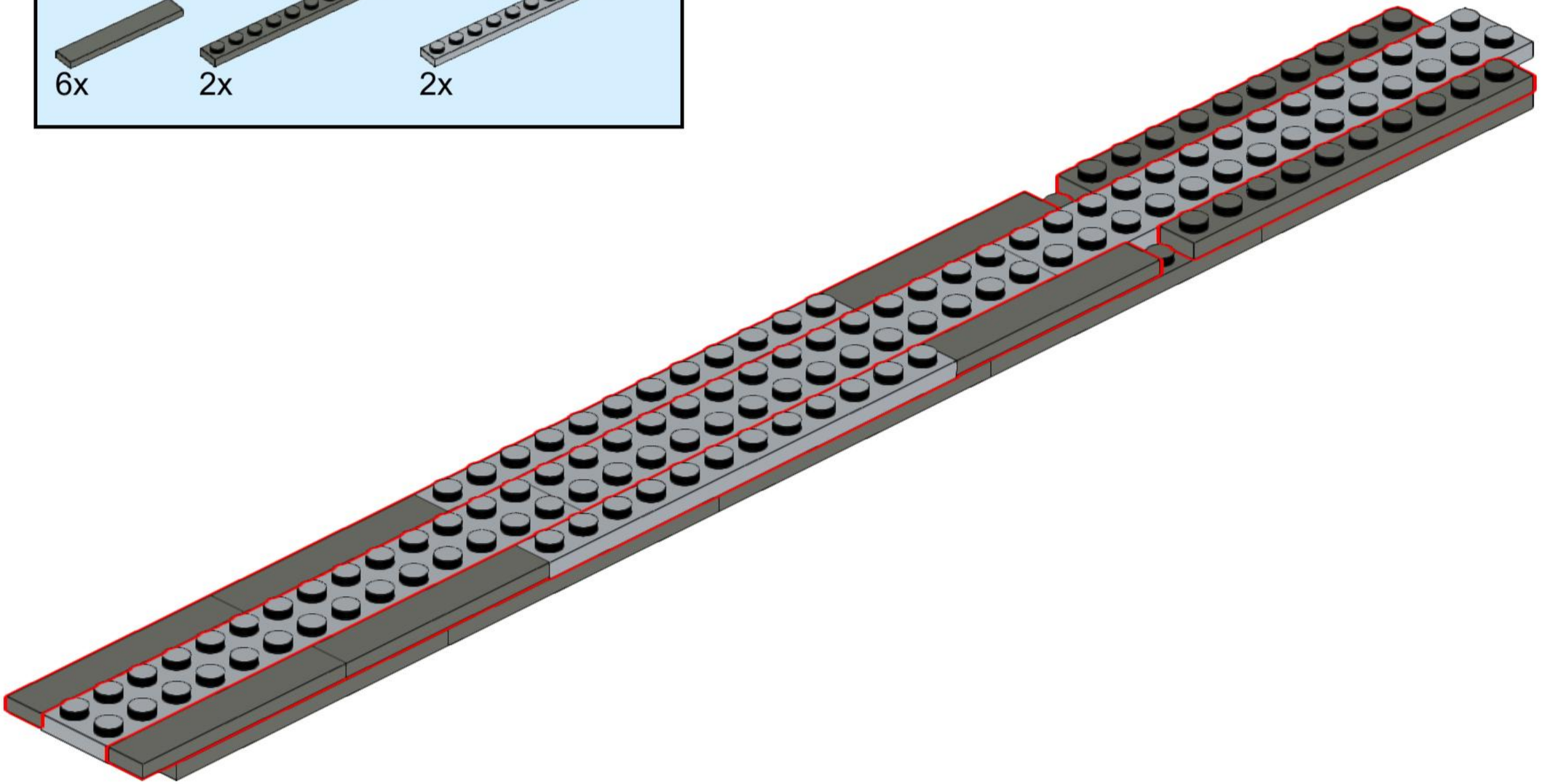

22

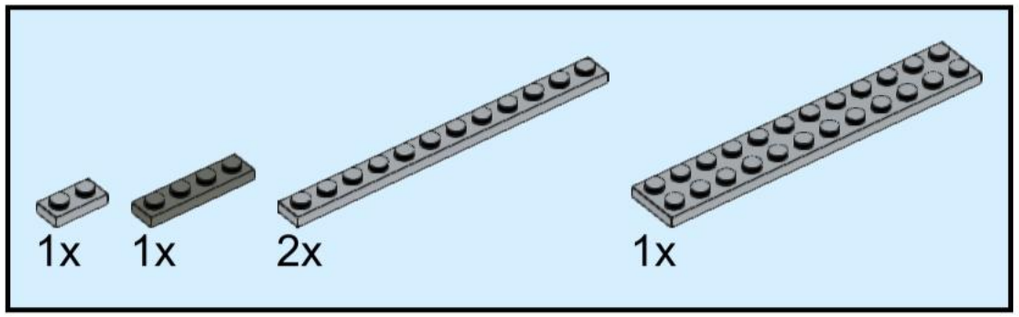

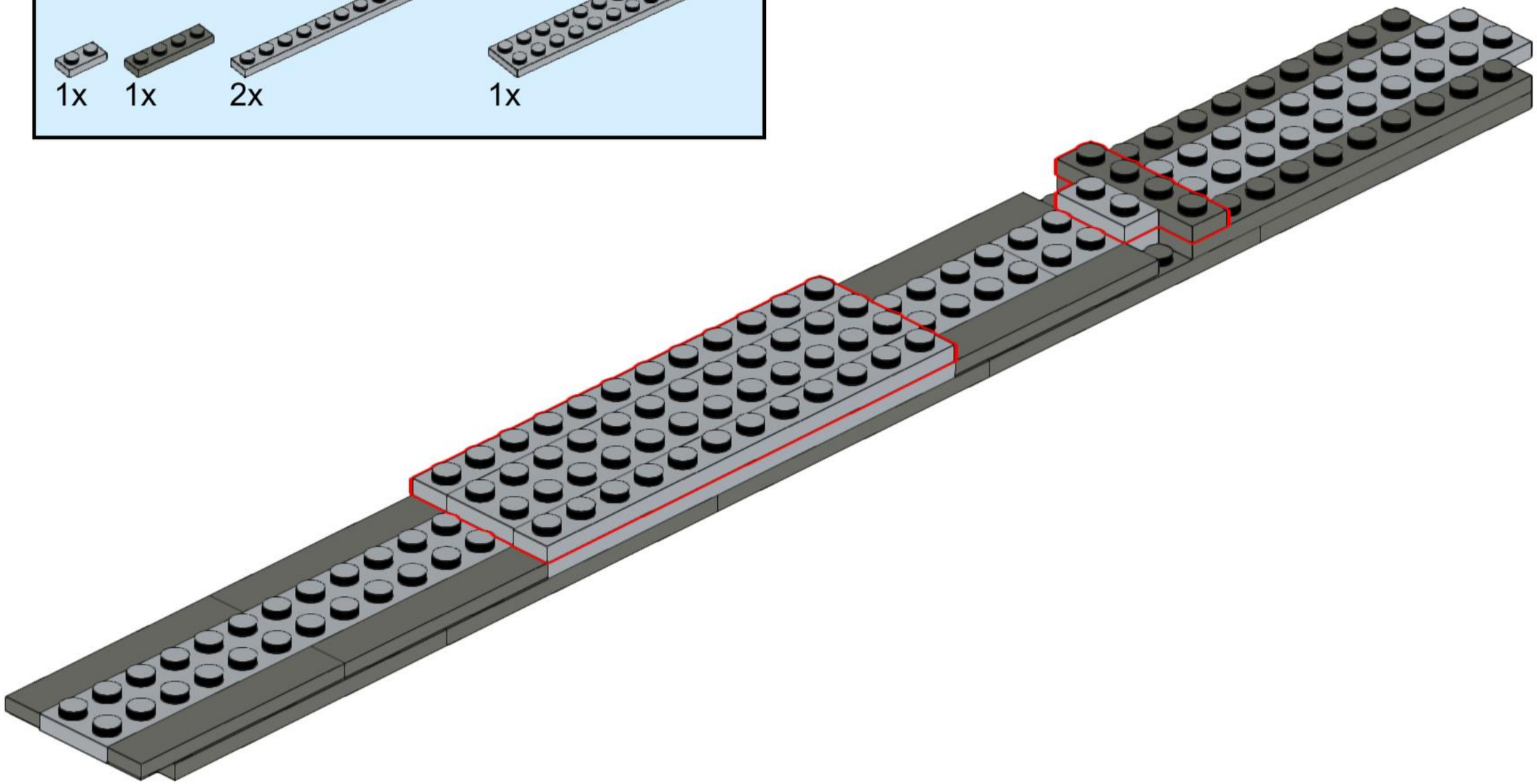

23

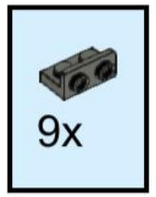

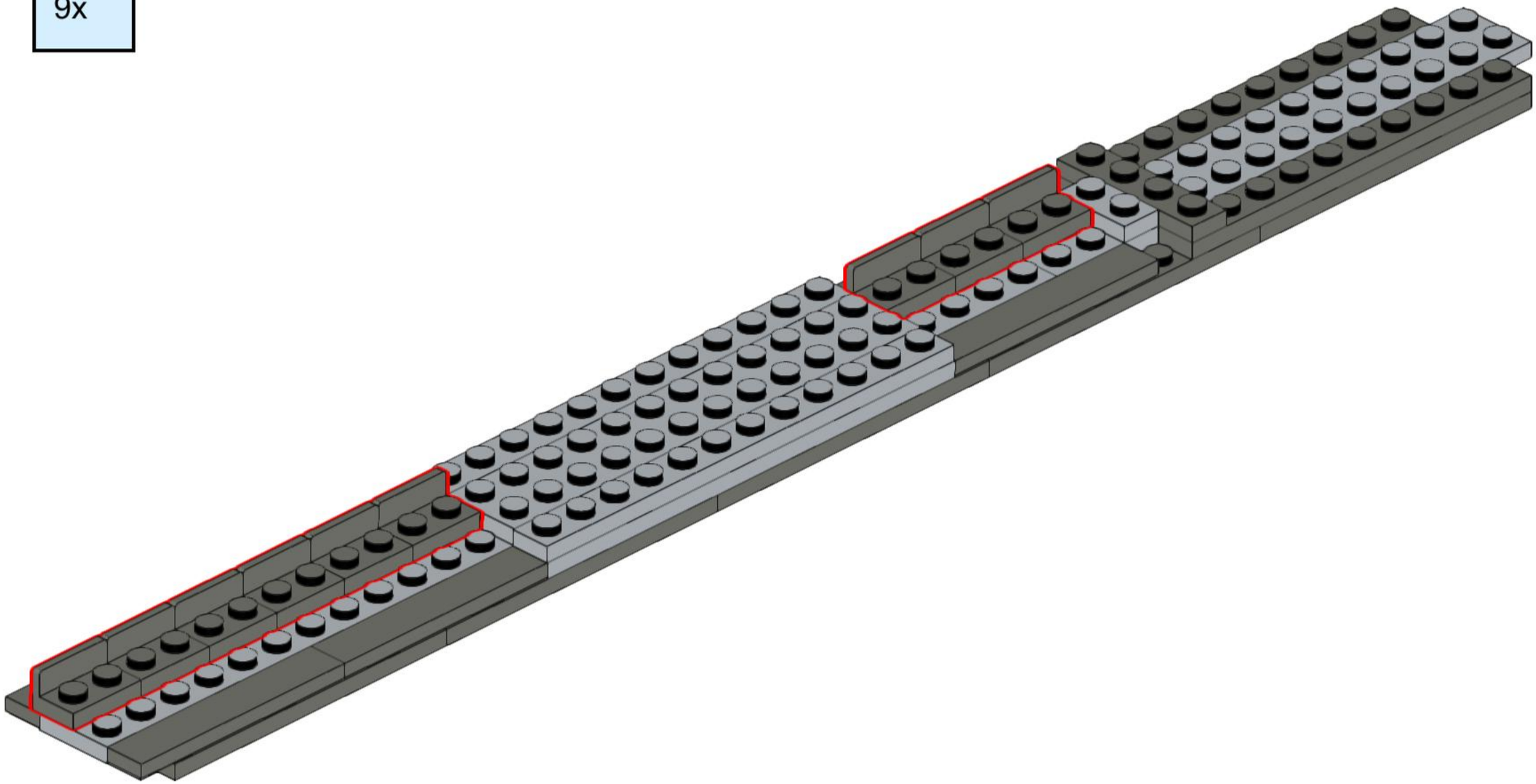

24

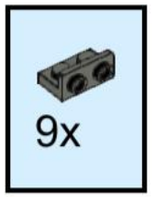

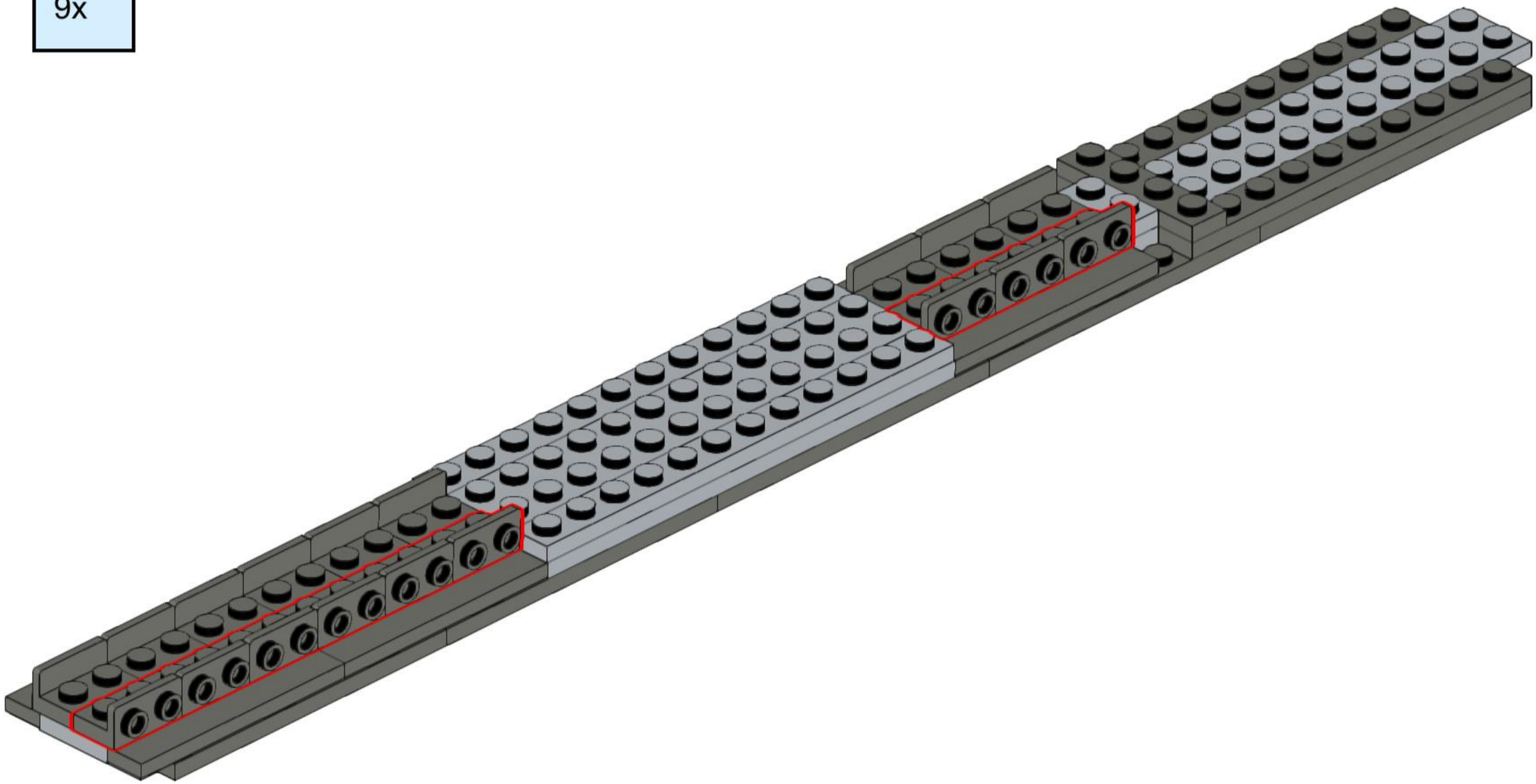

25

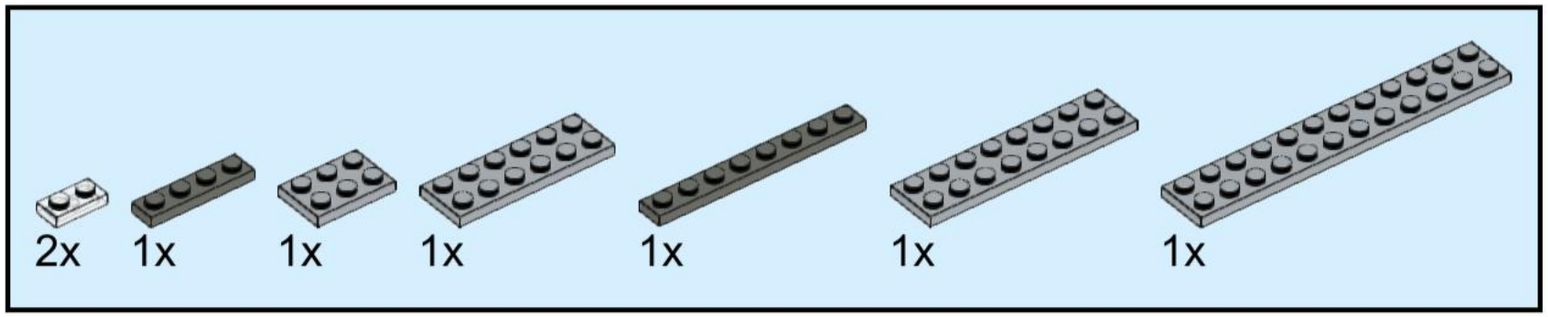

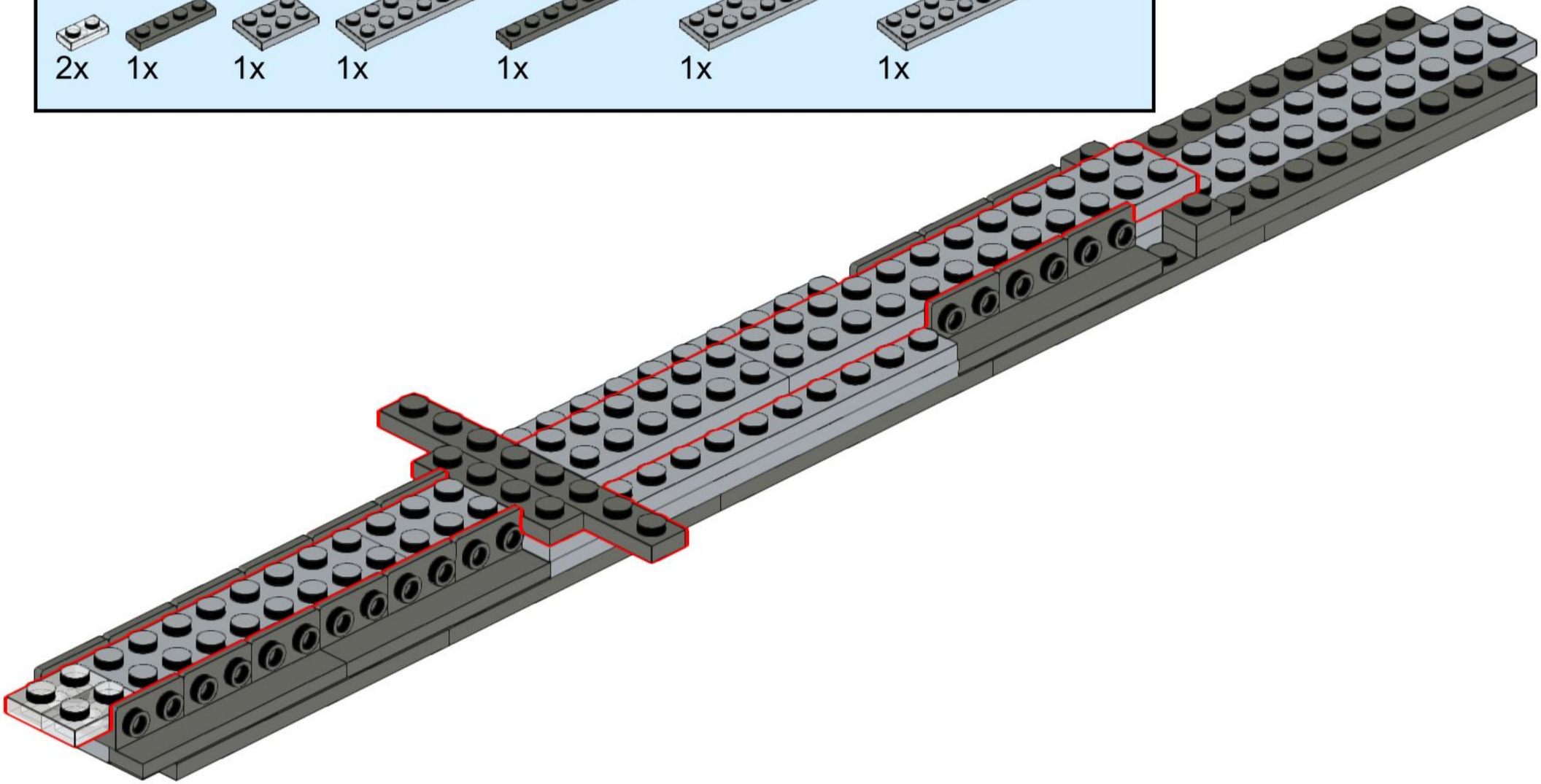

26

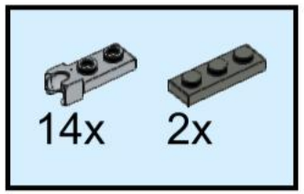

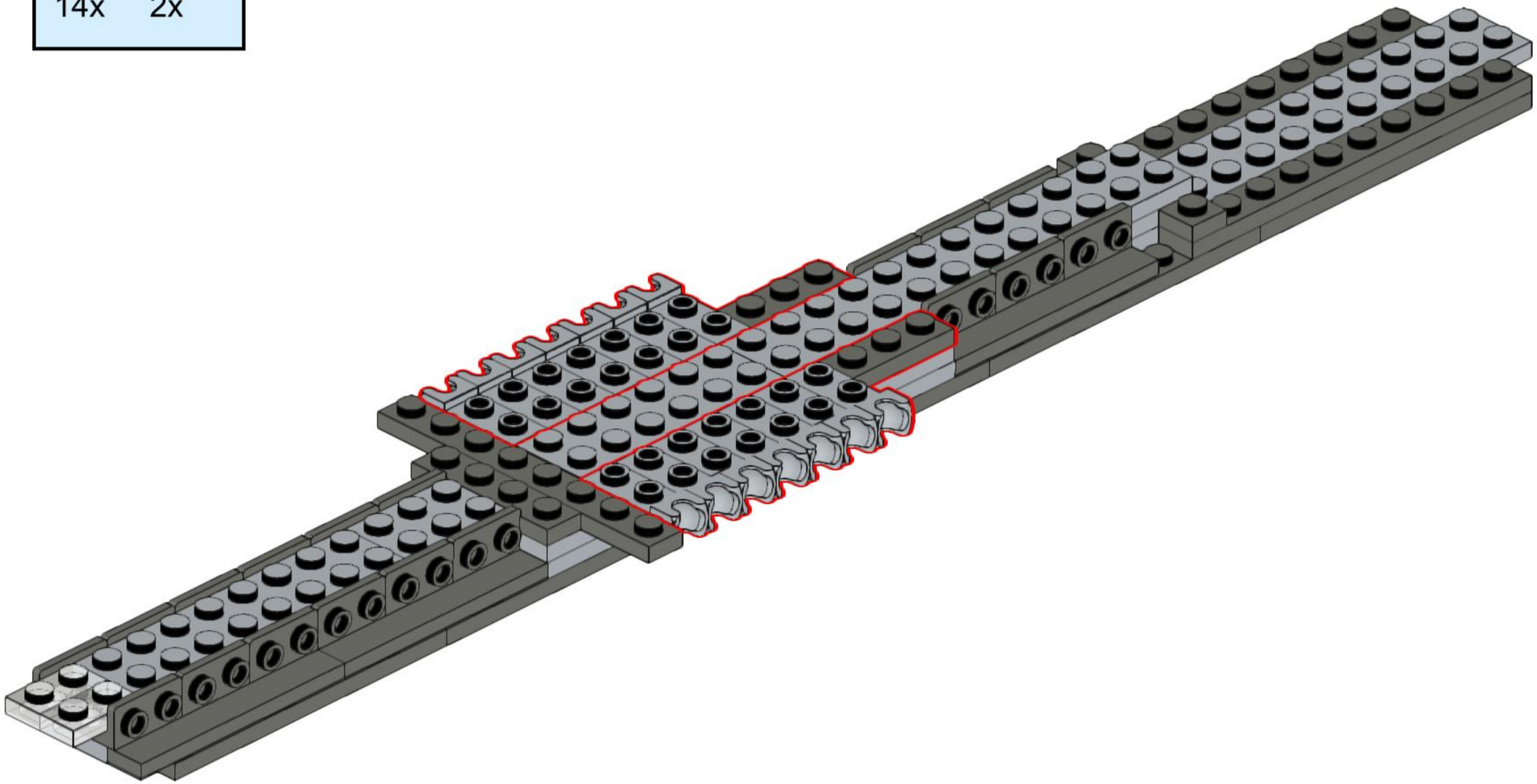

27

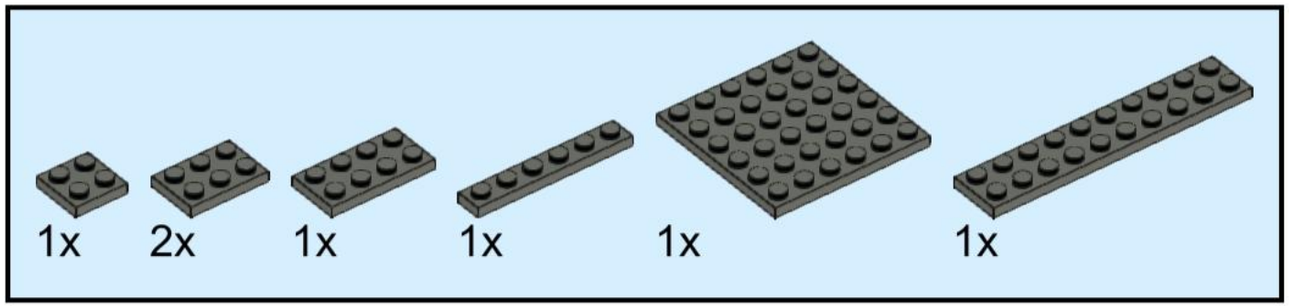

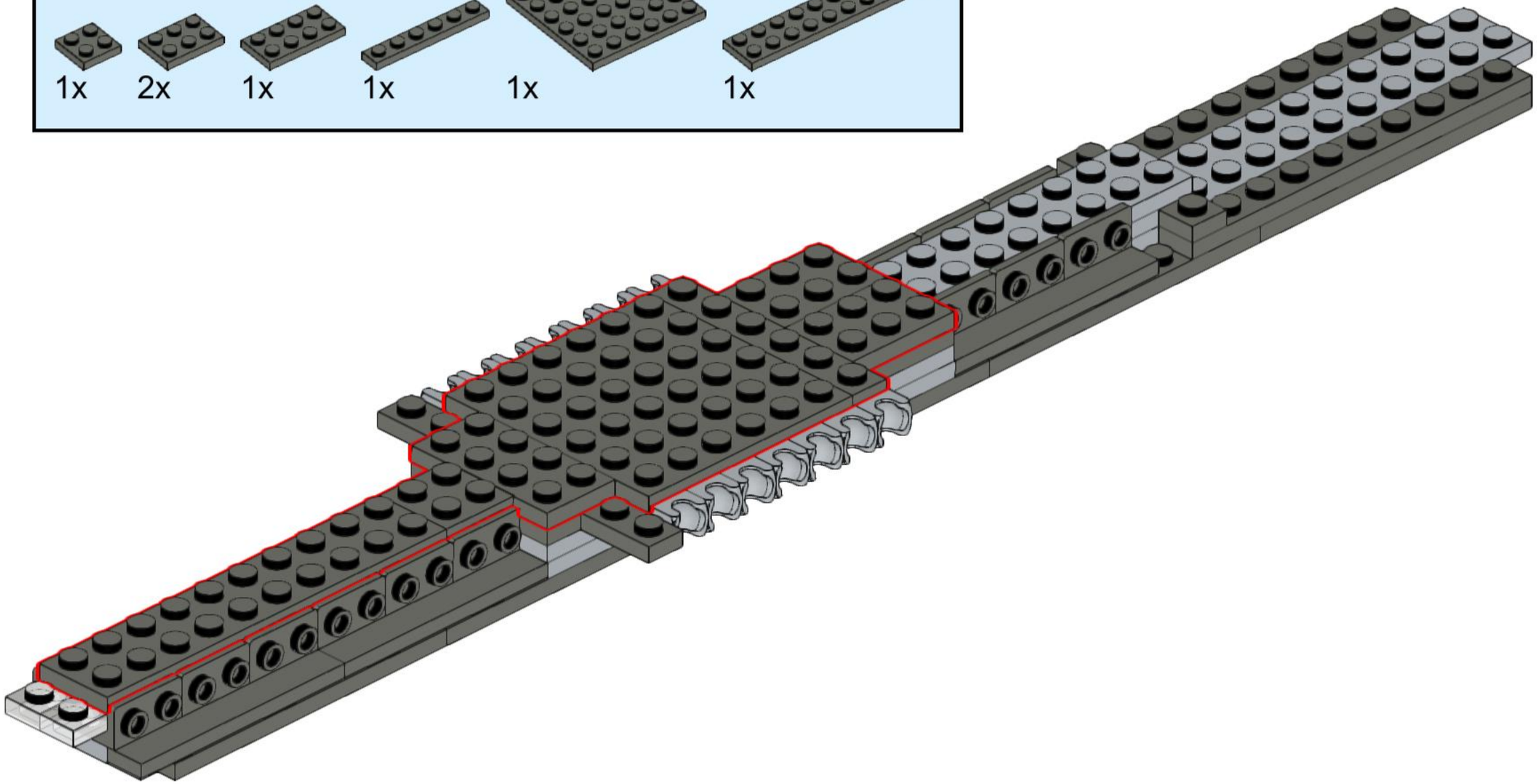

28

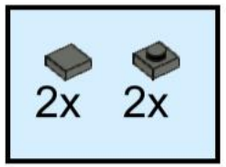

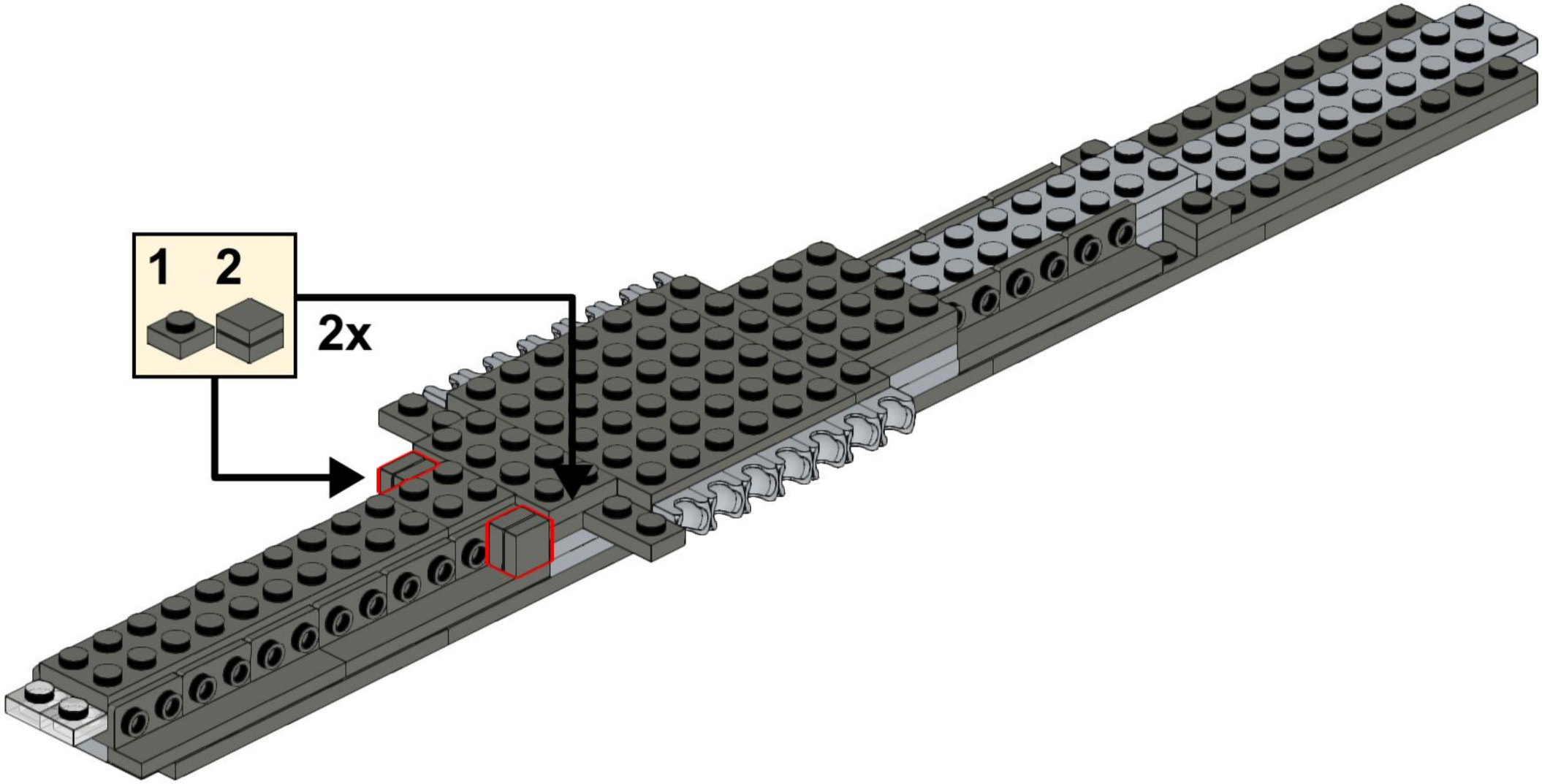

29

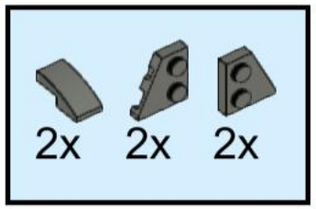

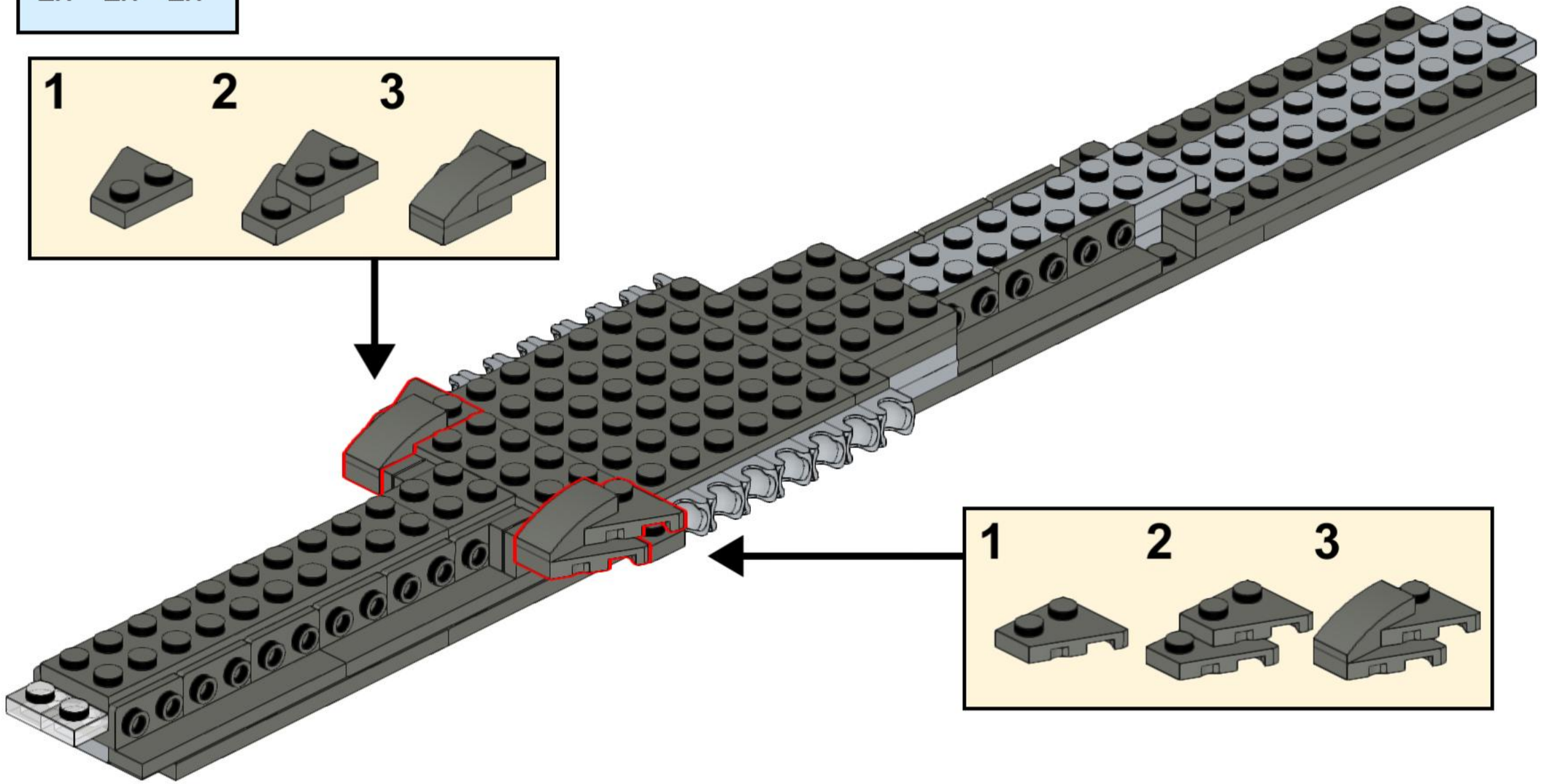

30

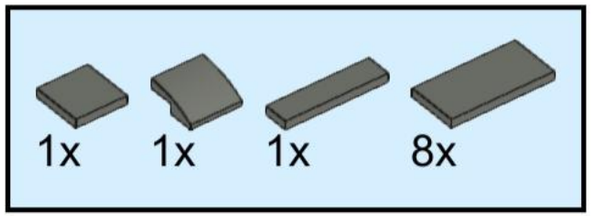

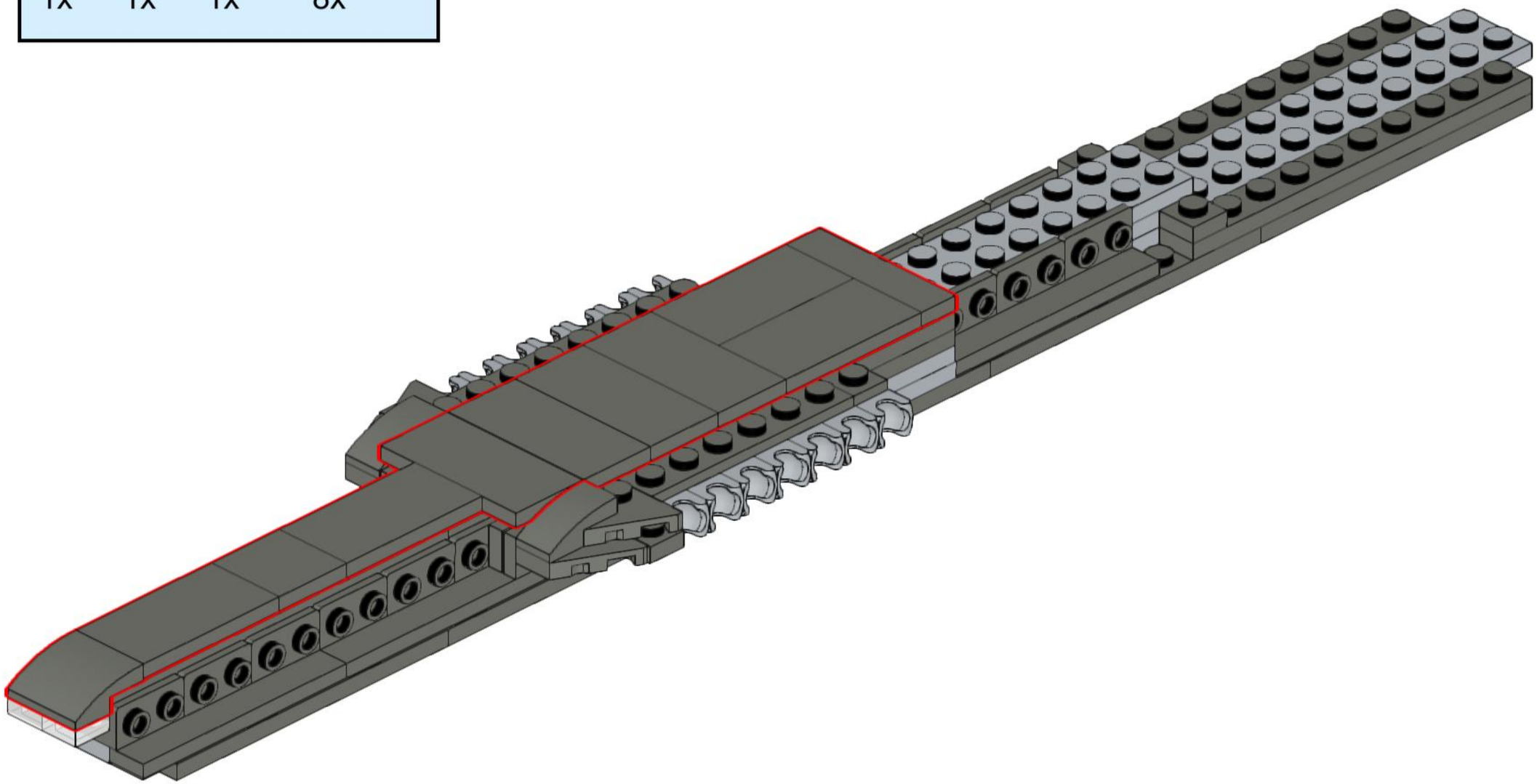

31

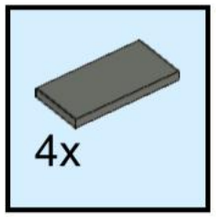

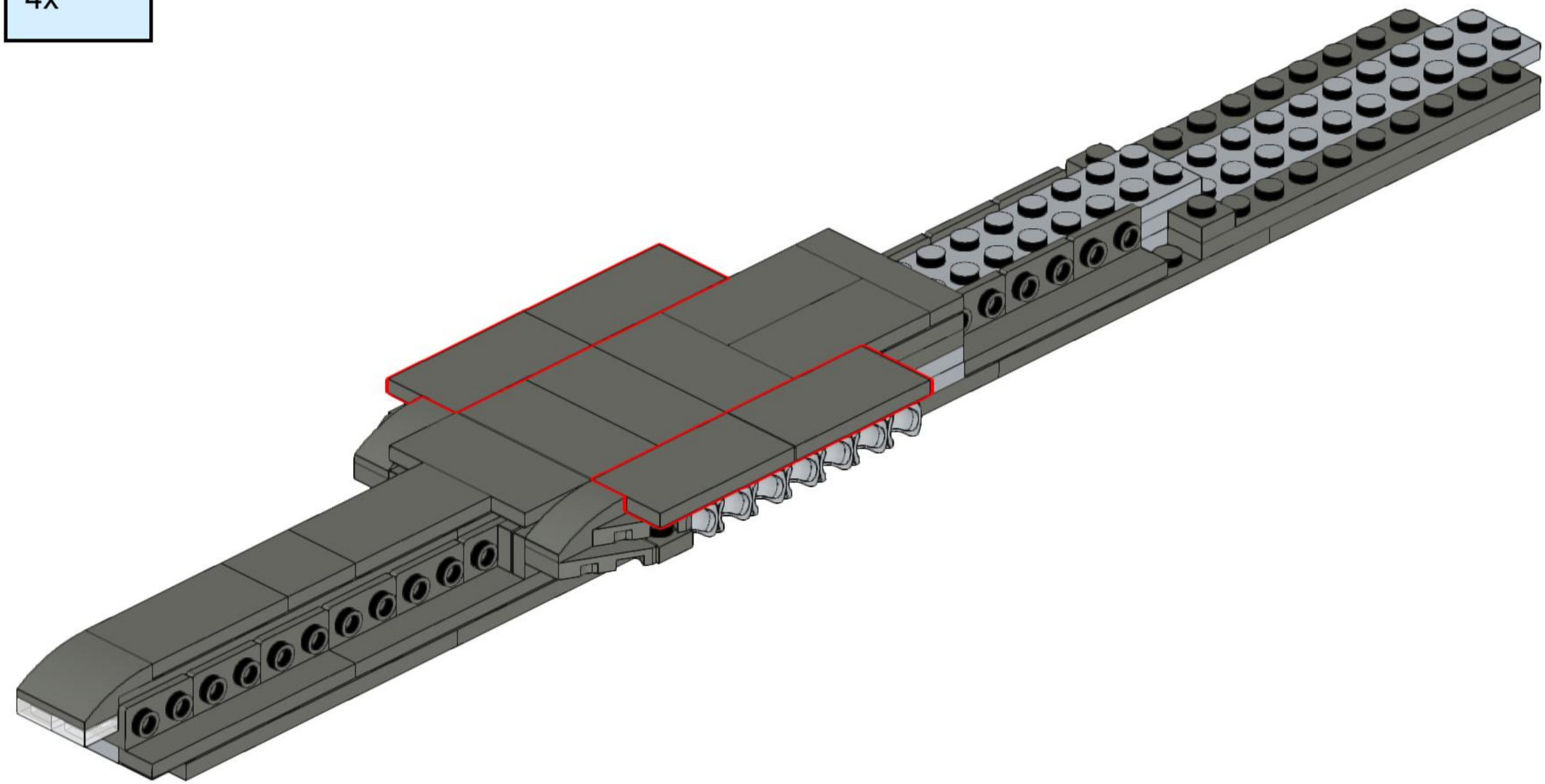

32

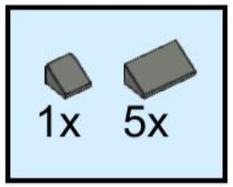

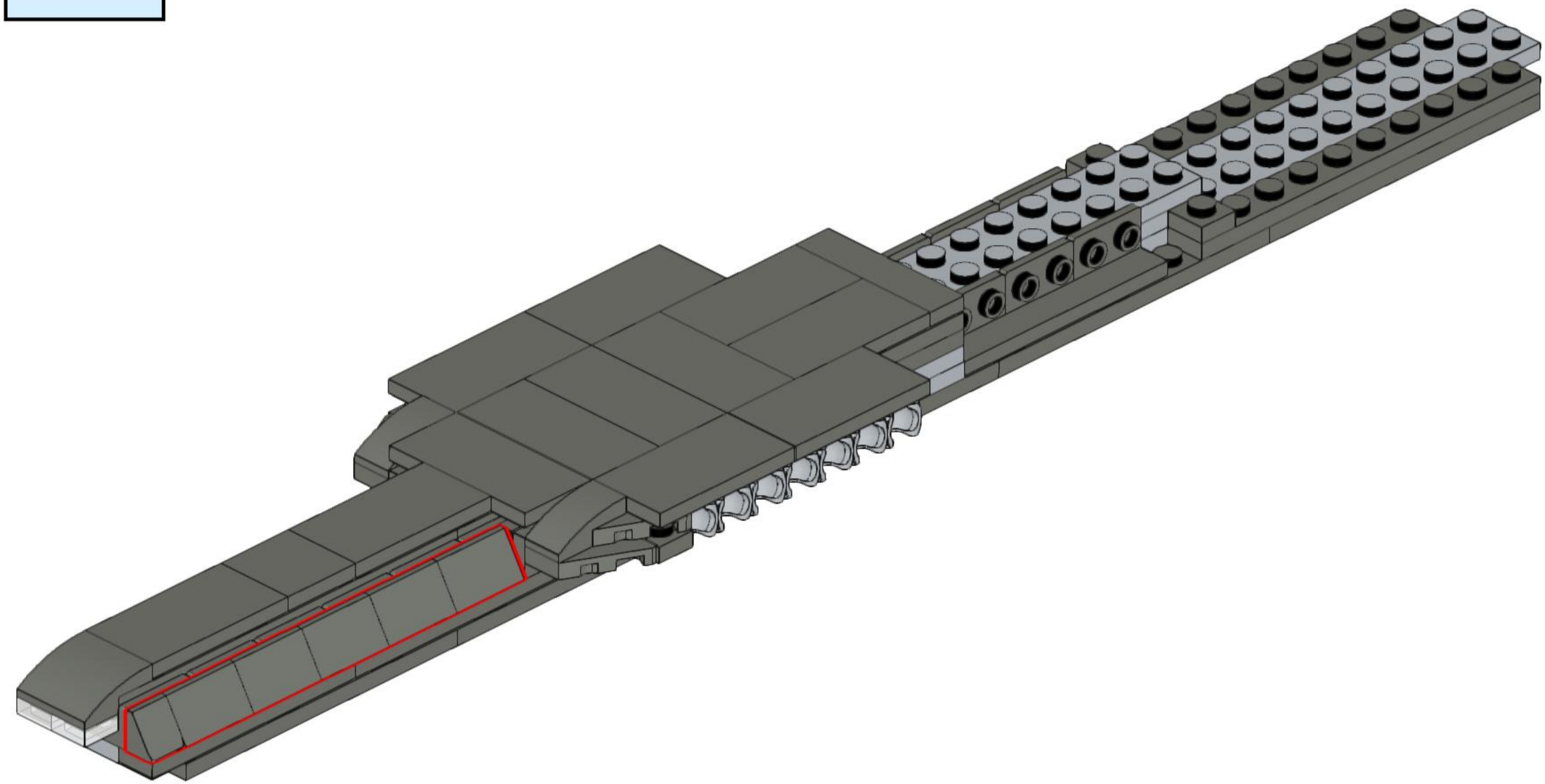

33

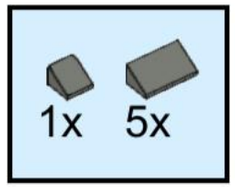

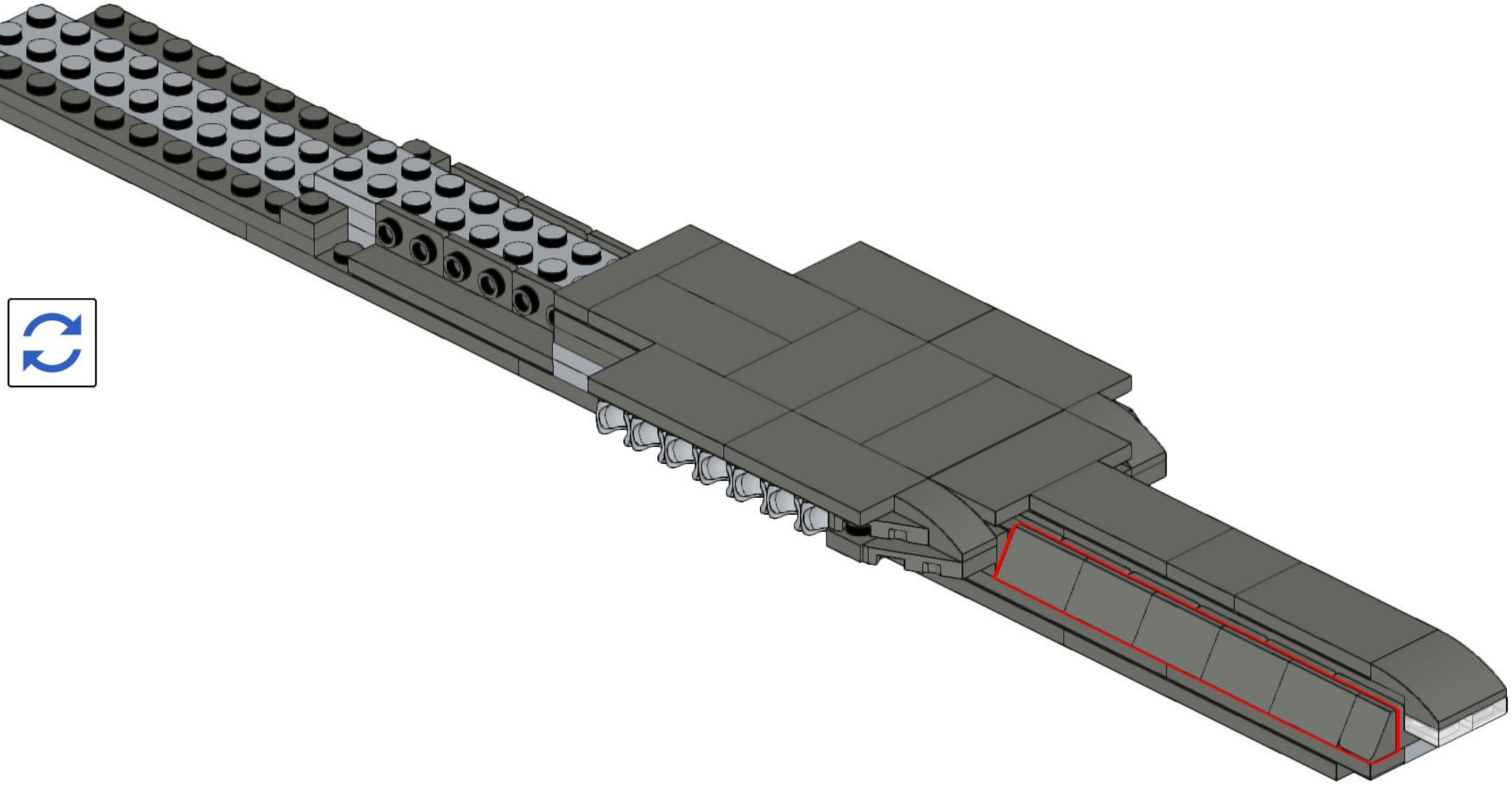

34

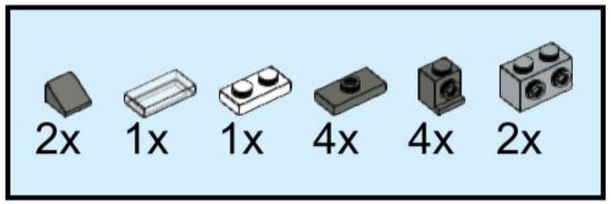

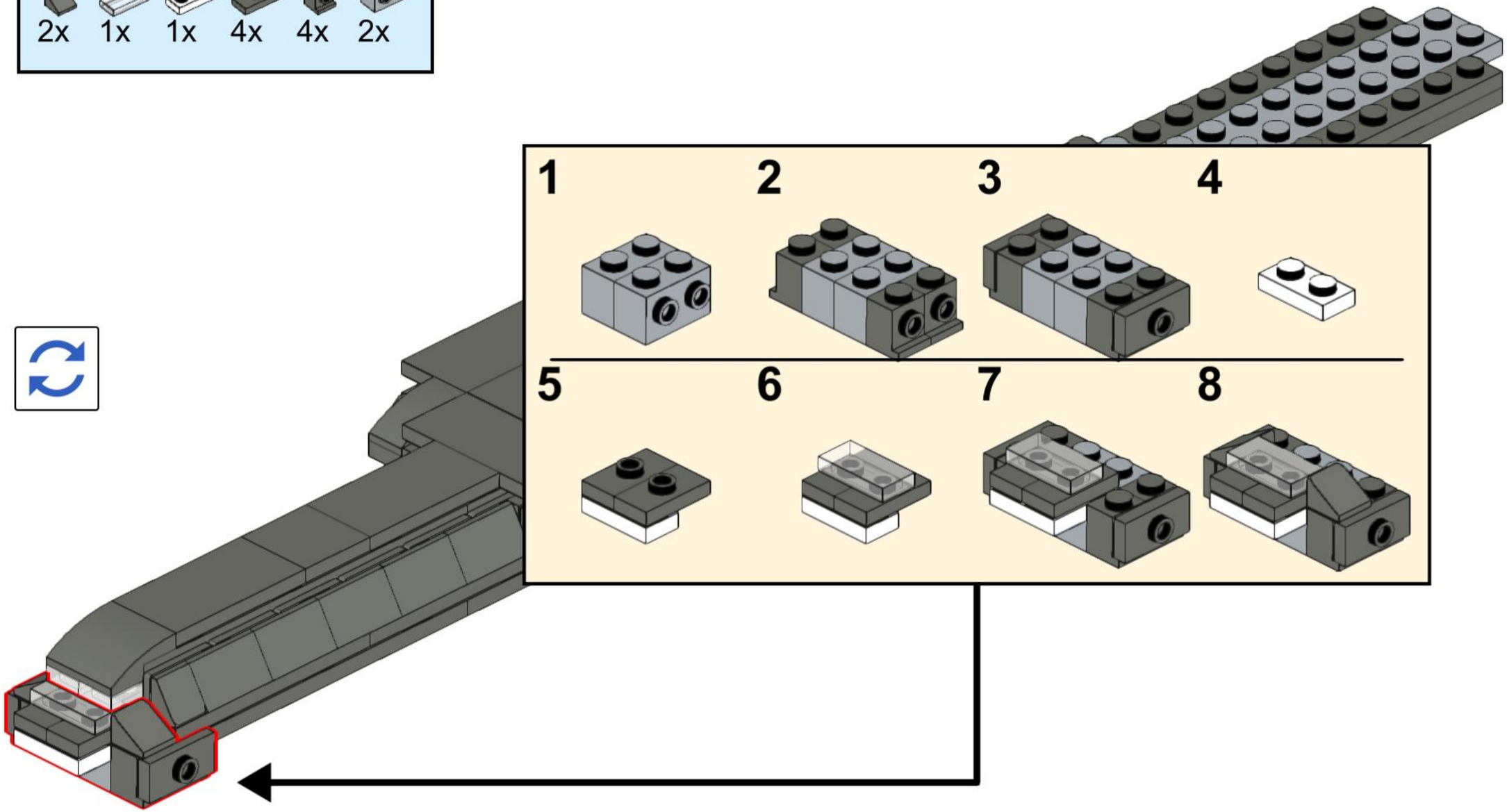

35

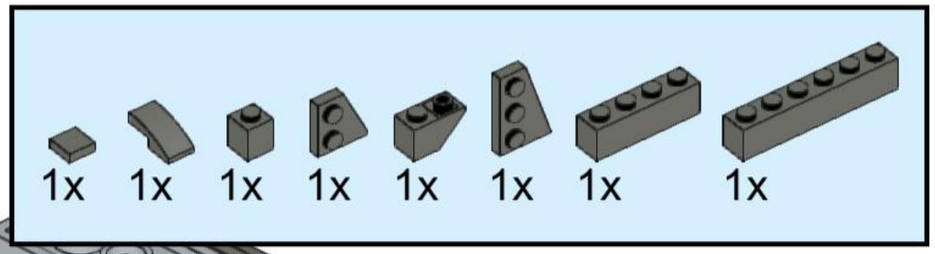

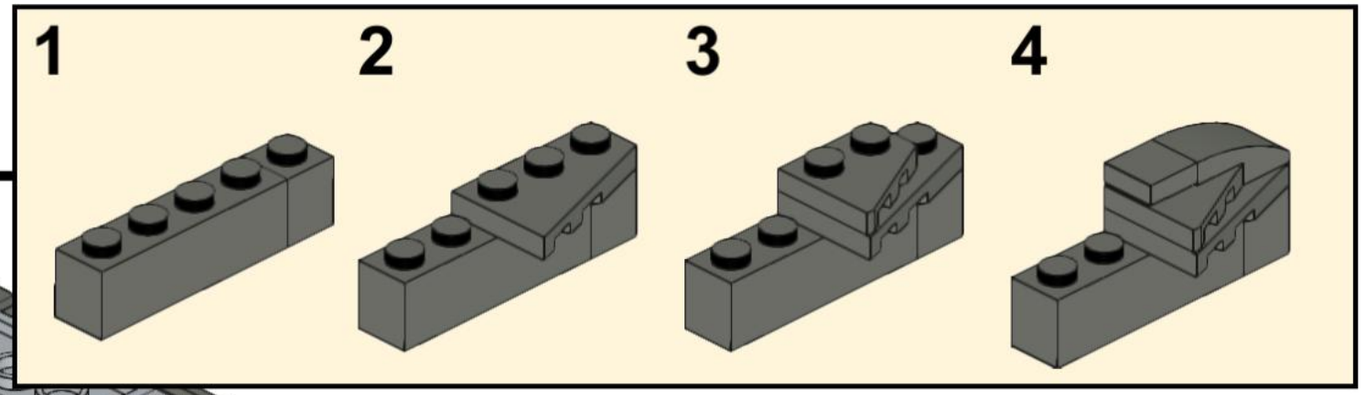

36

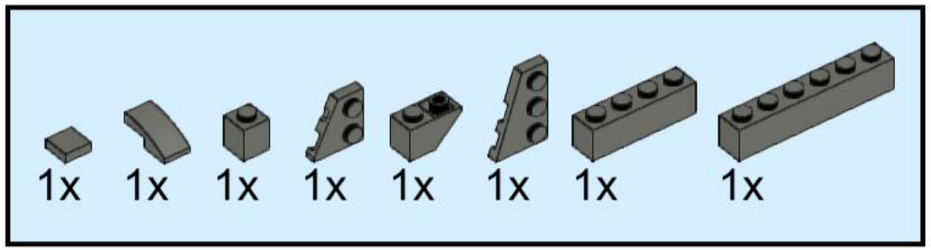

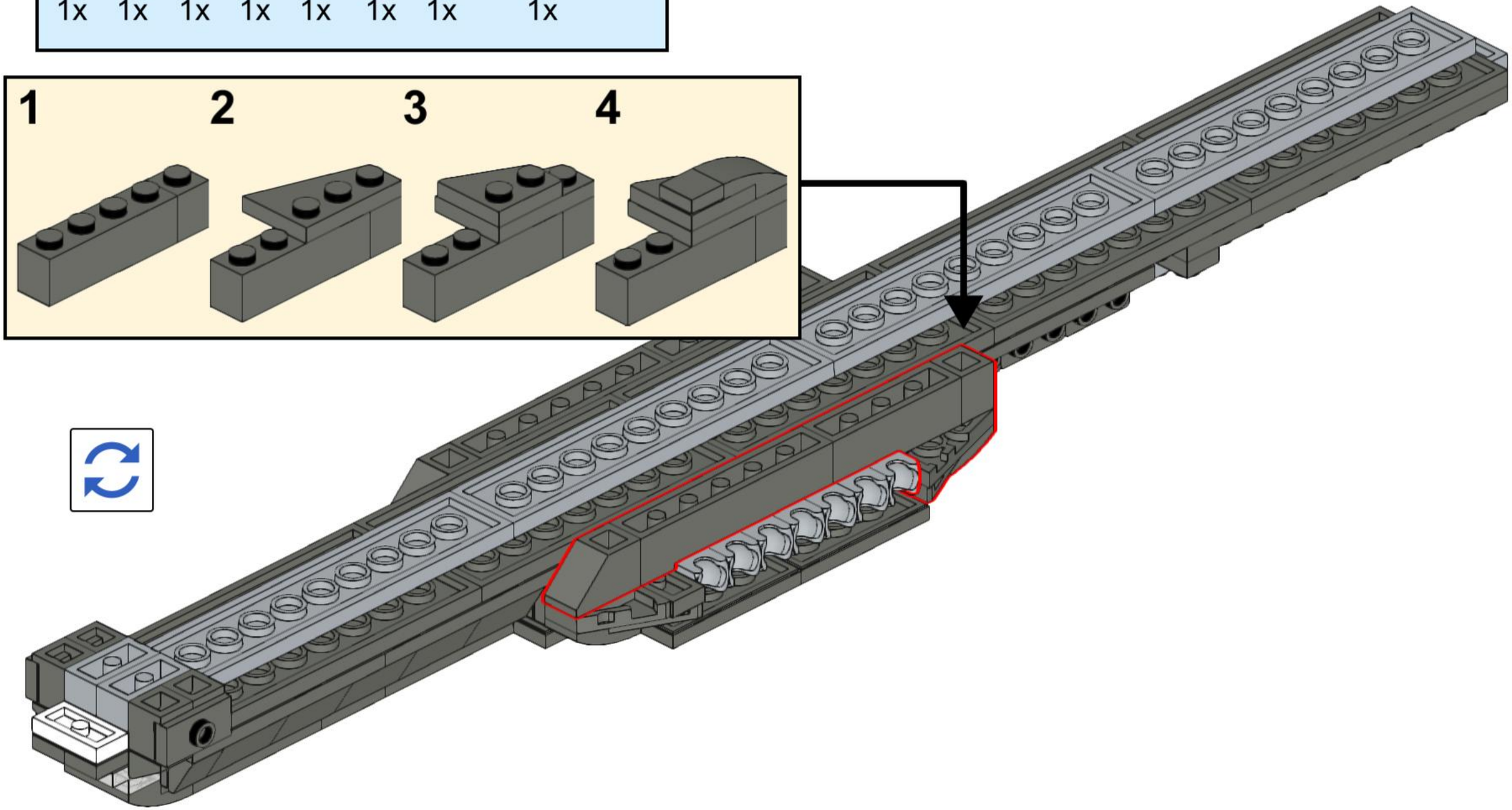

37

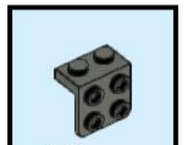

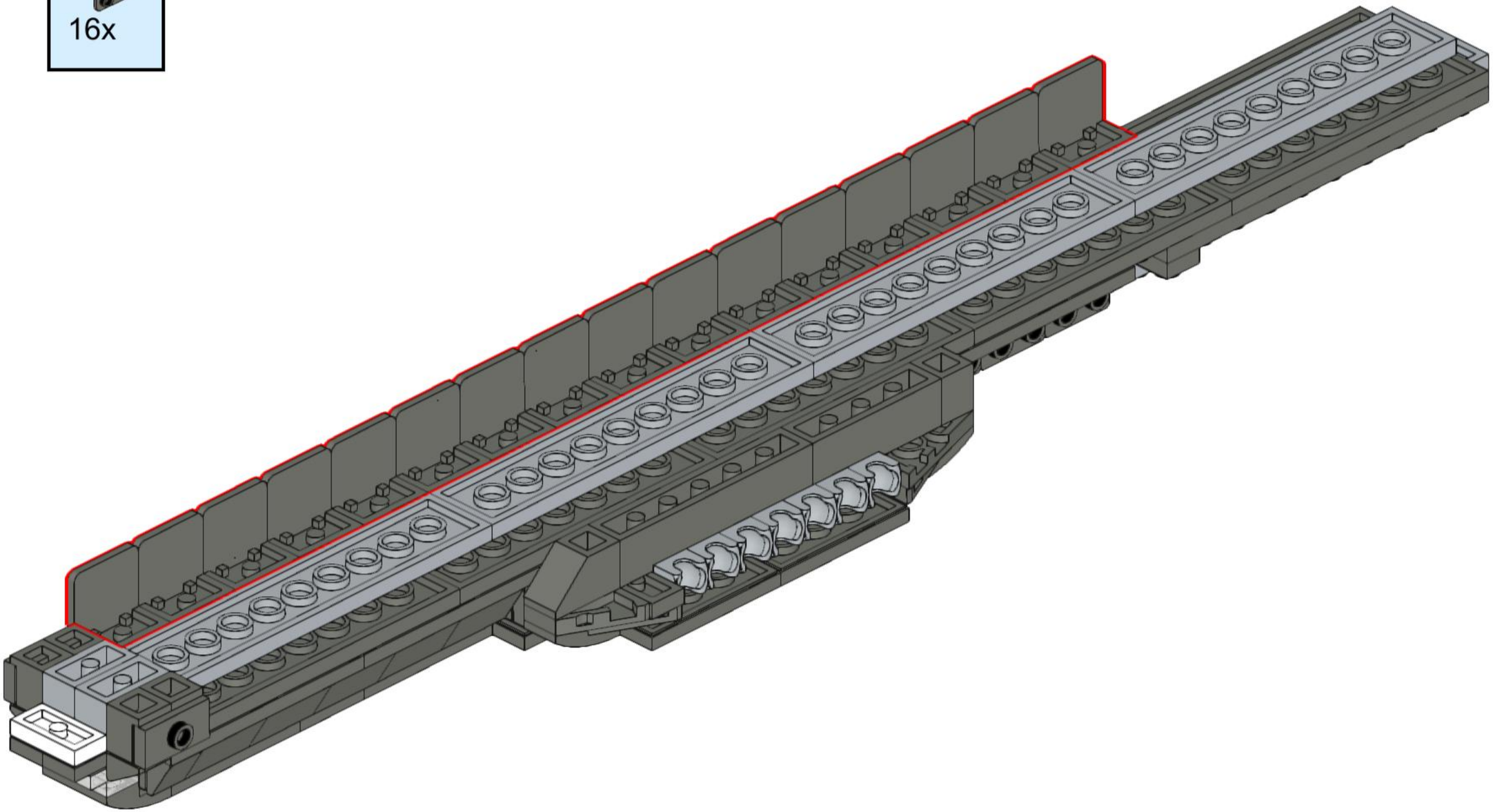

38

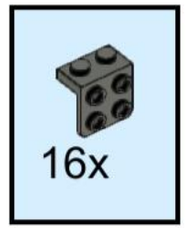

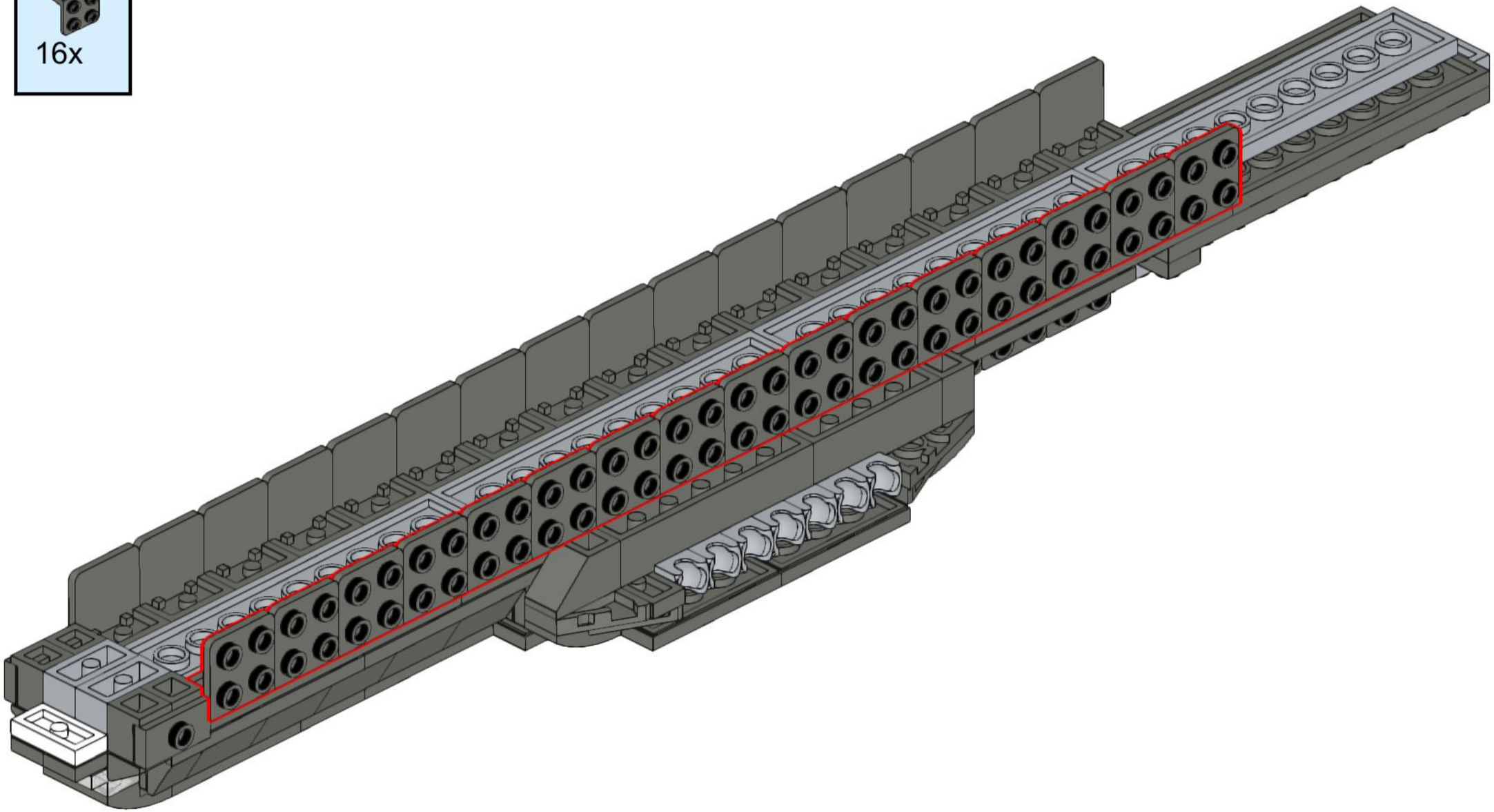

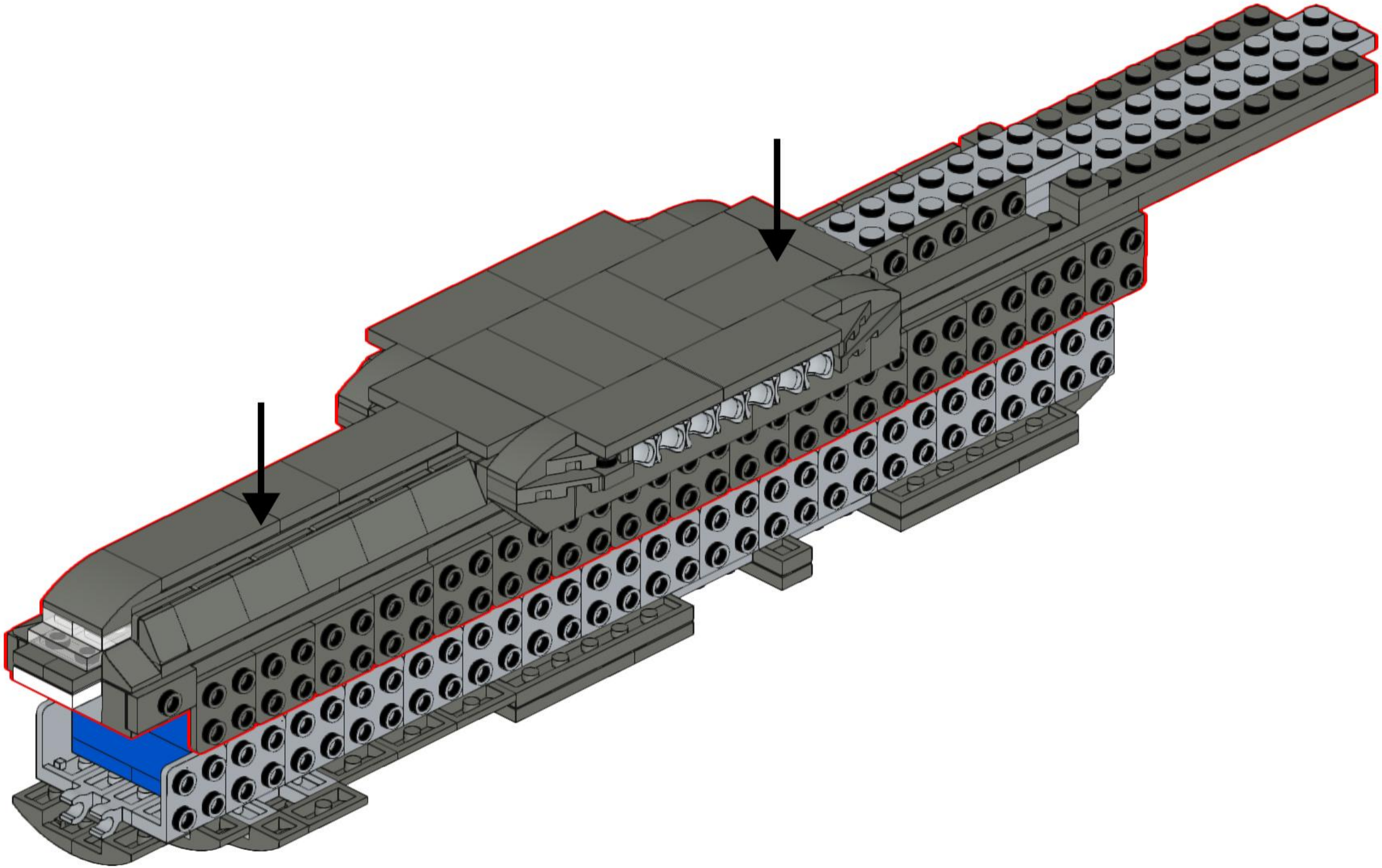

40

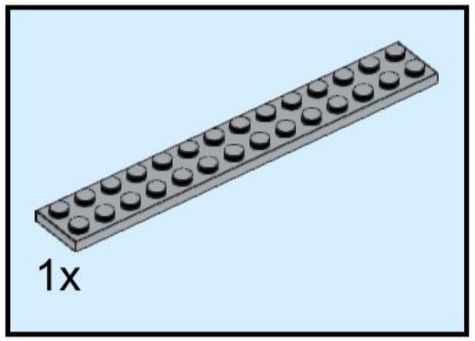

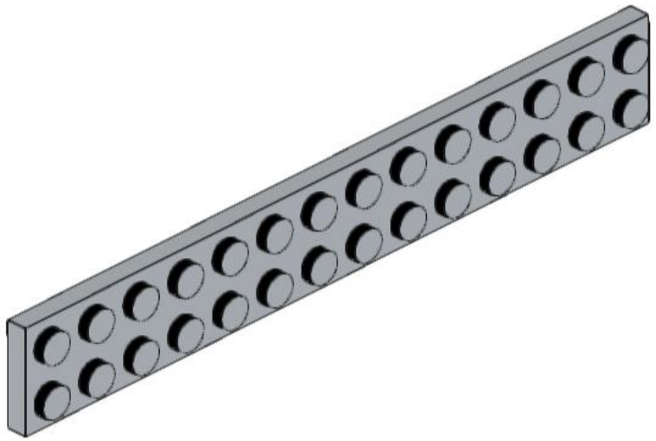

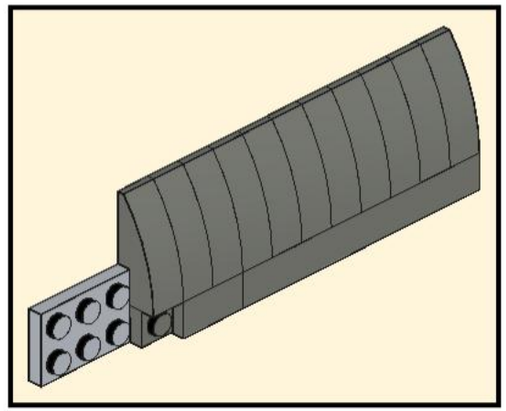

41

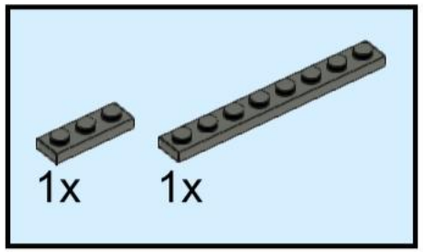

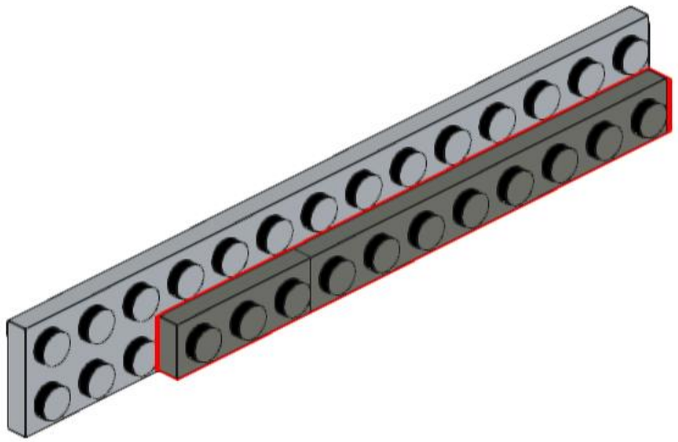

42

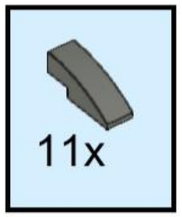

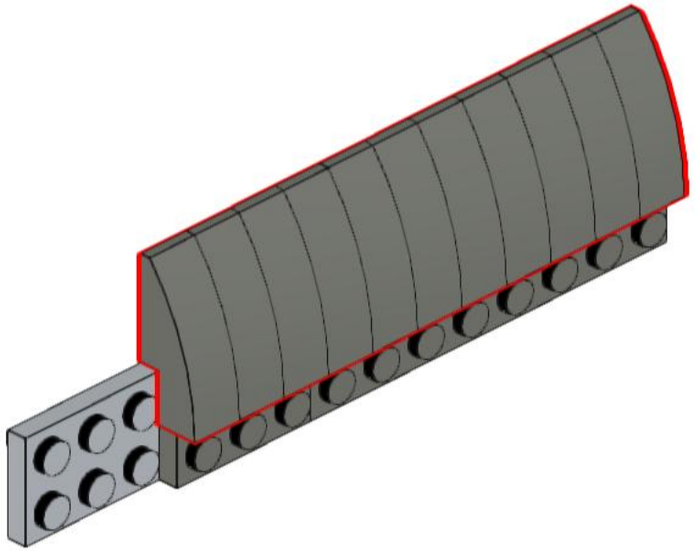

43

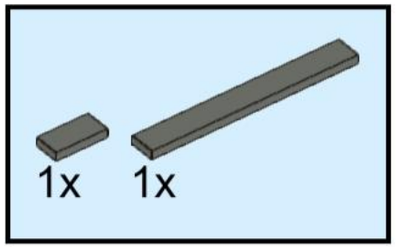

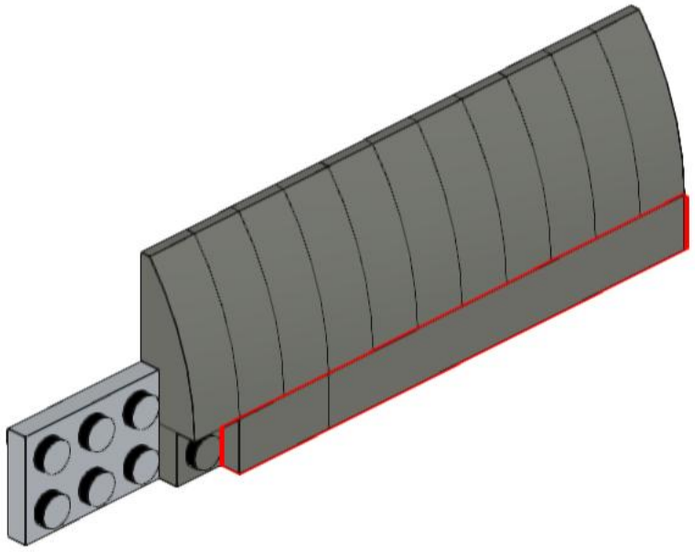

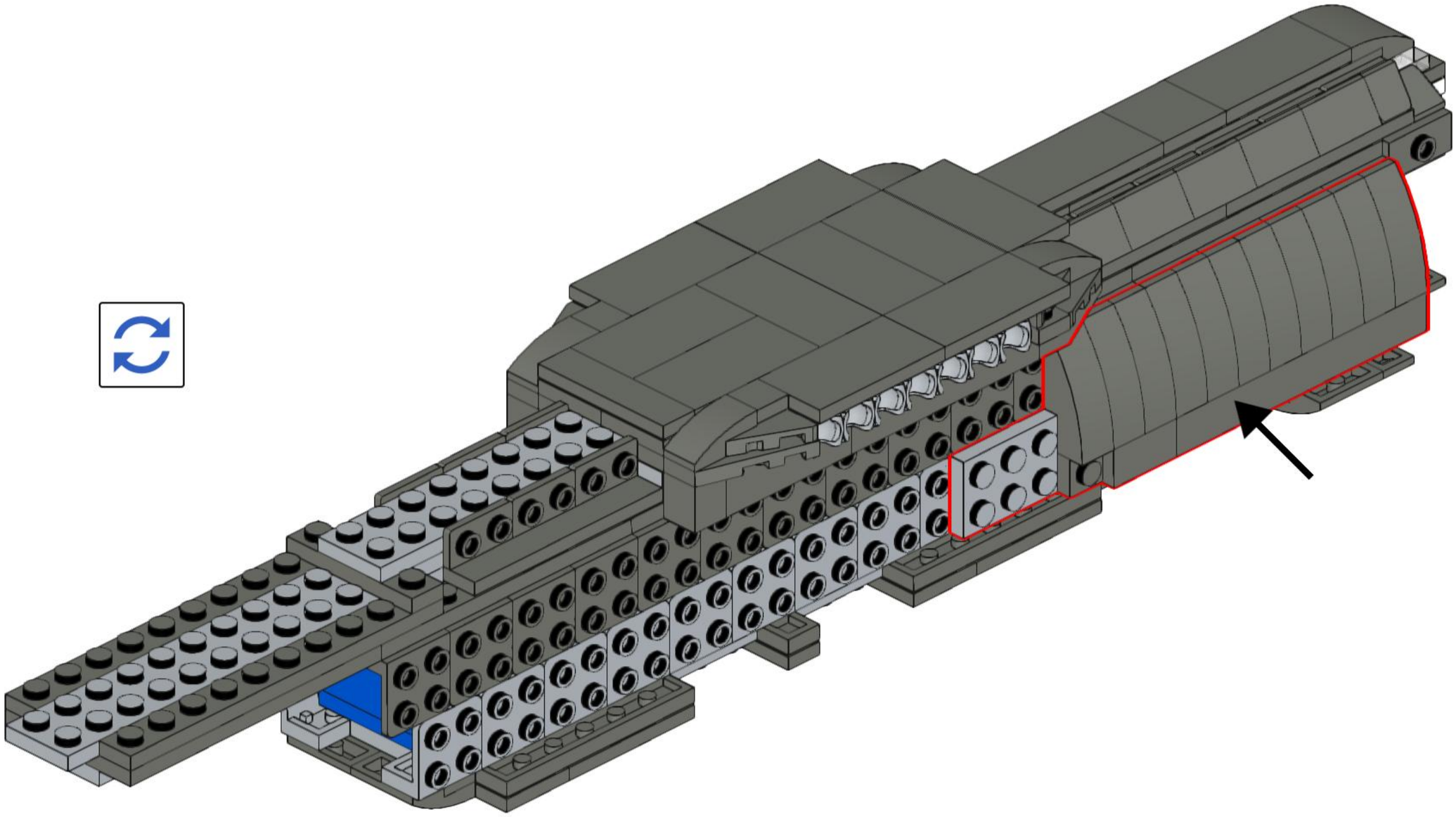

45

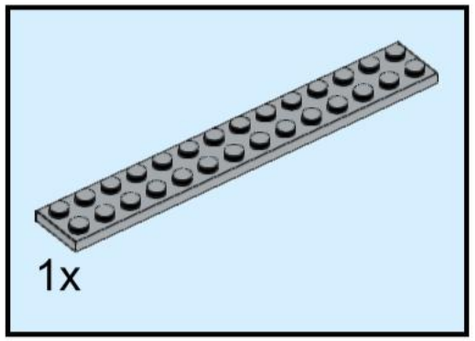

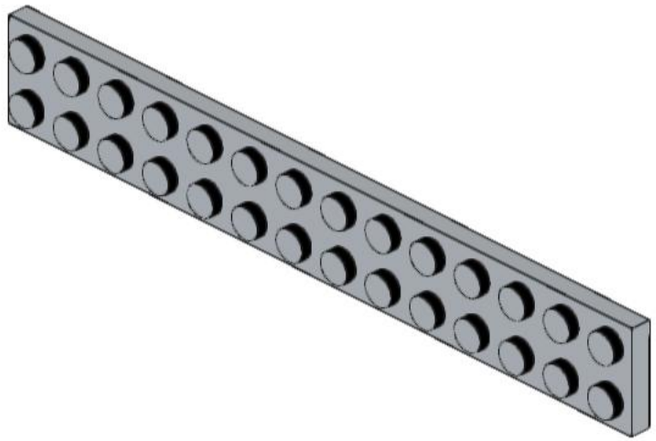

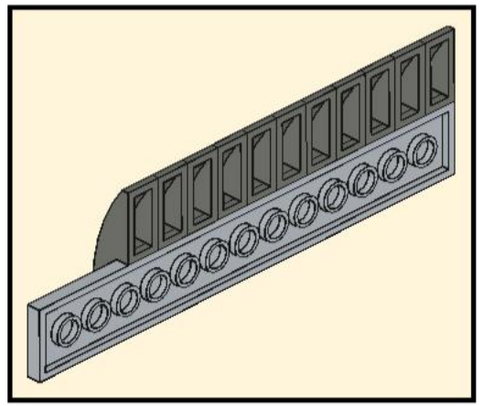

46

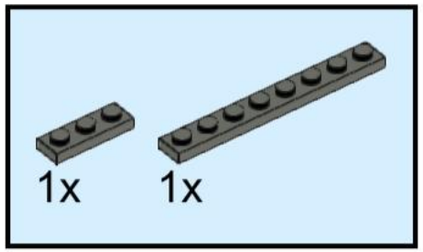

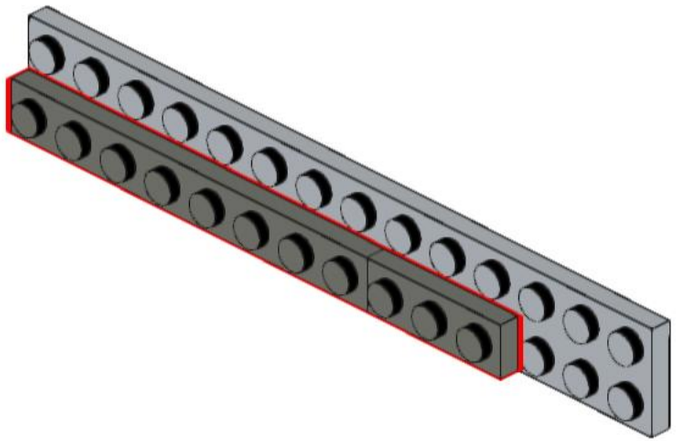

47

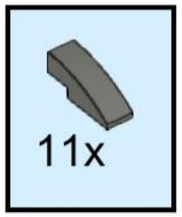

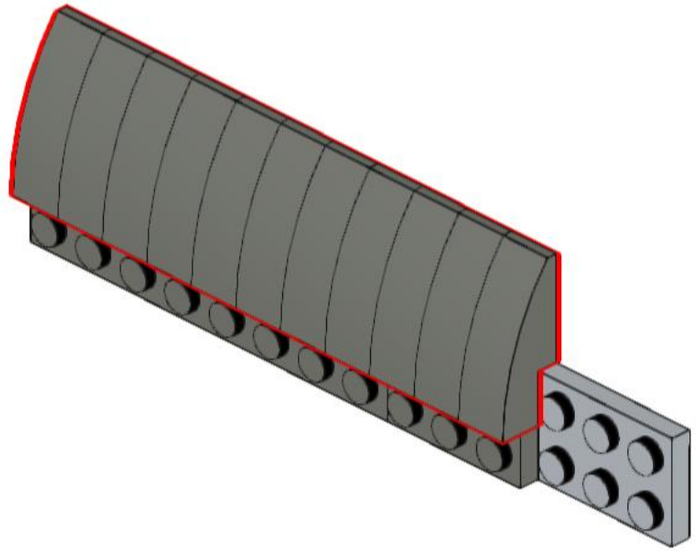

48

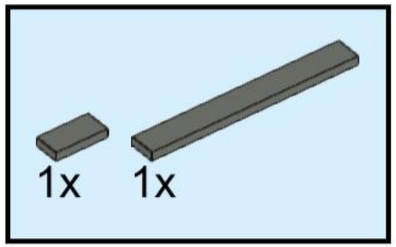

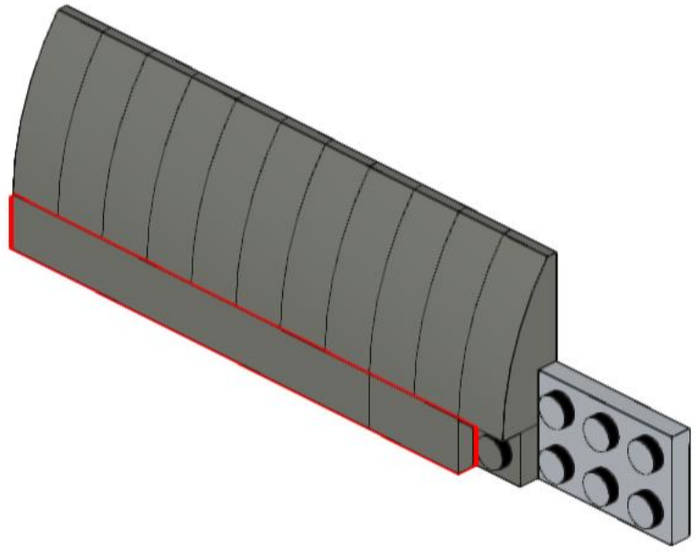

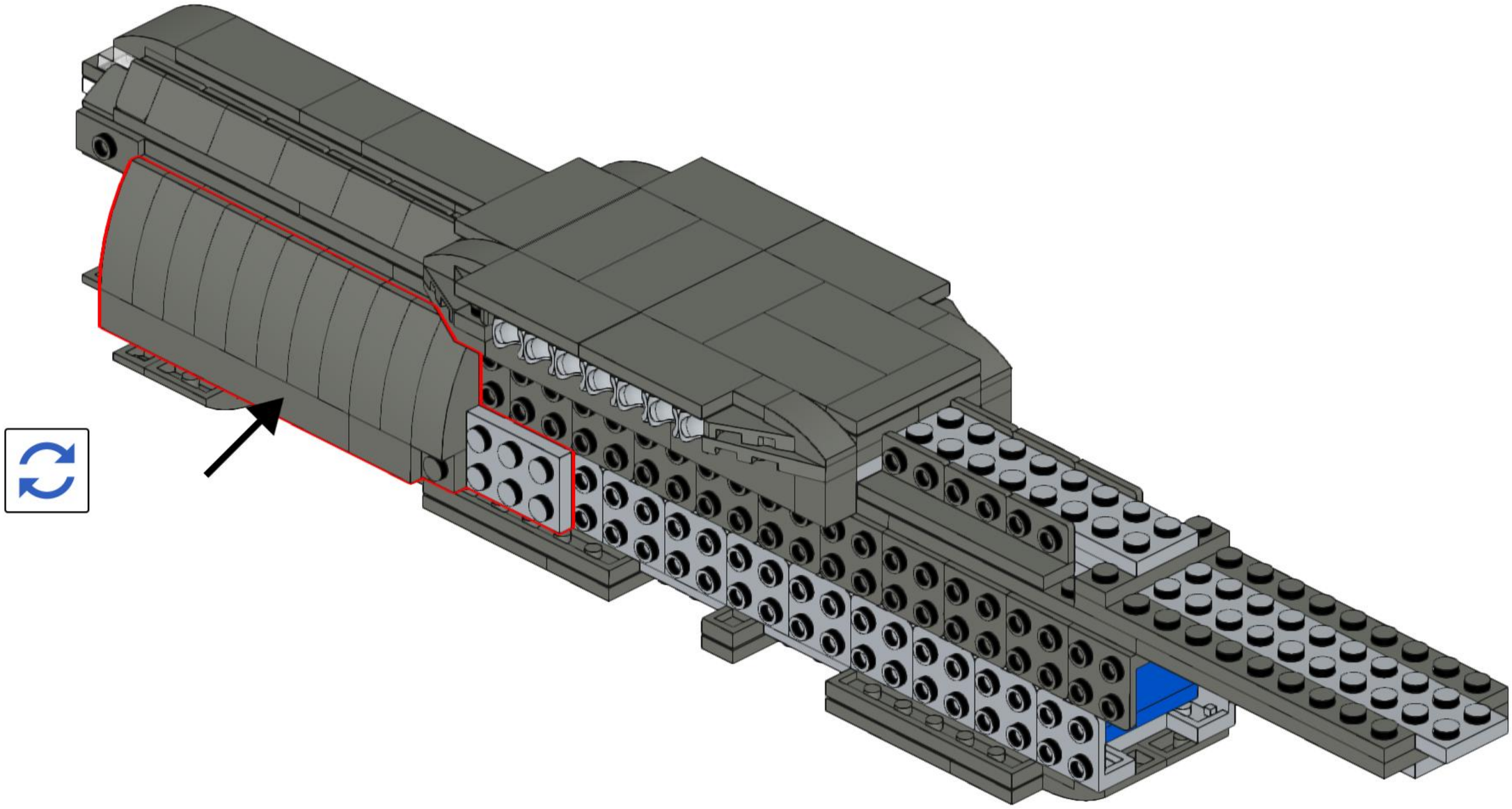

50

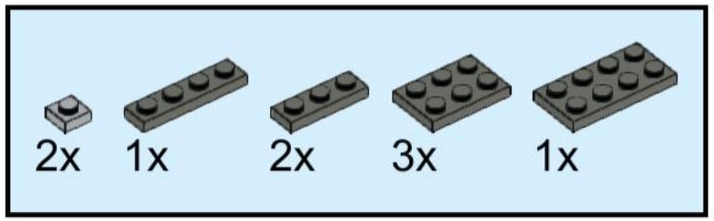

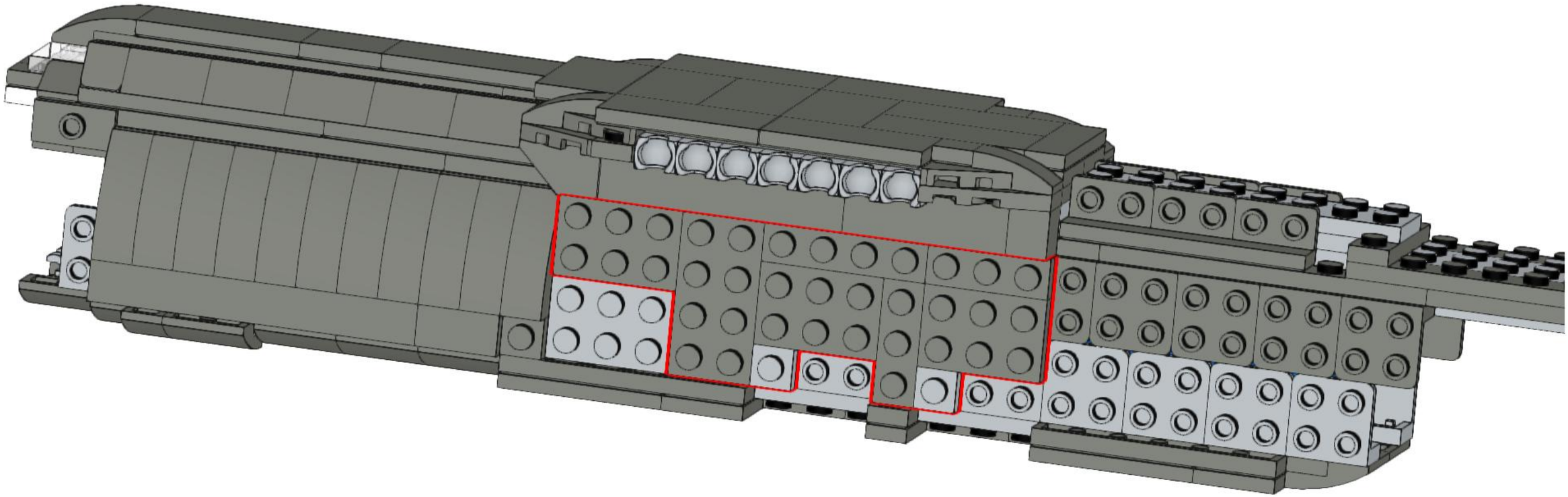

51

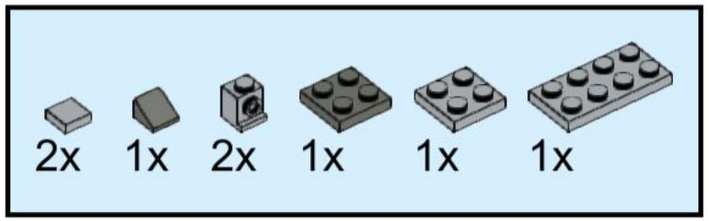

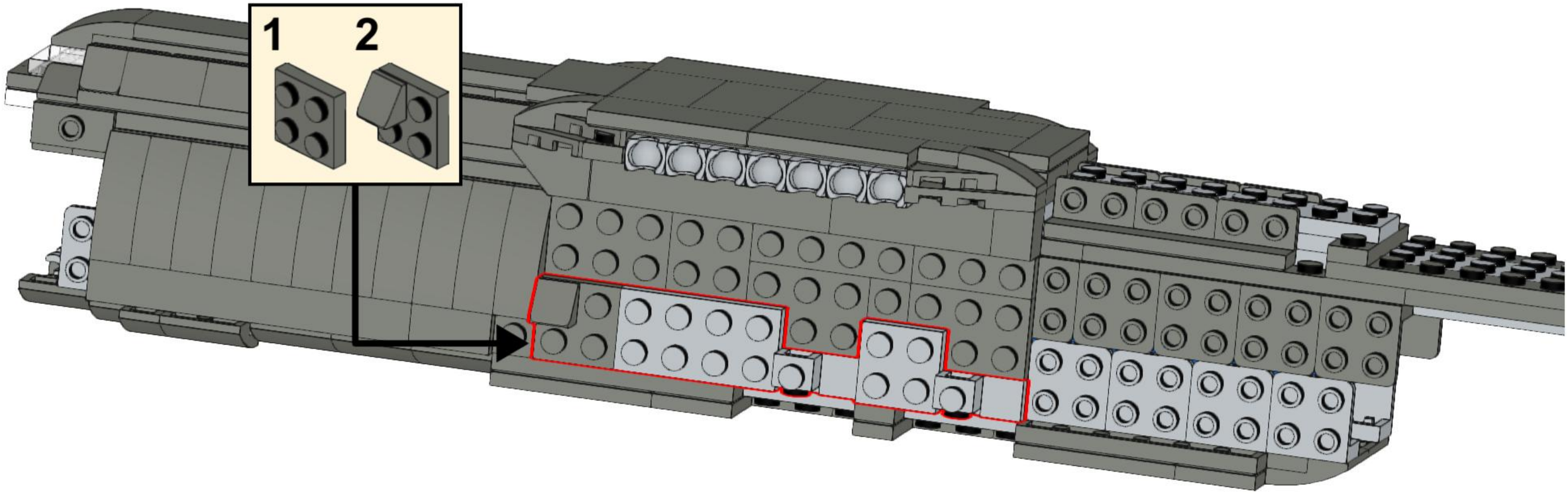

52

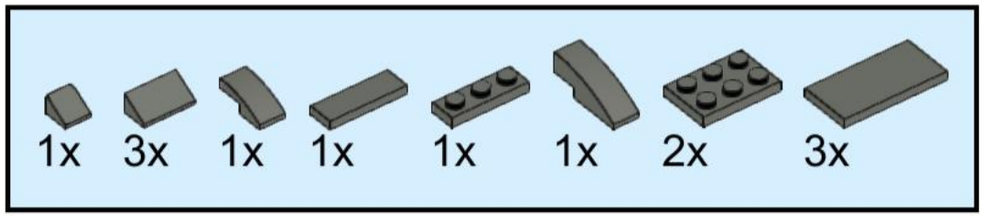

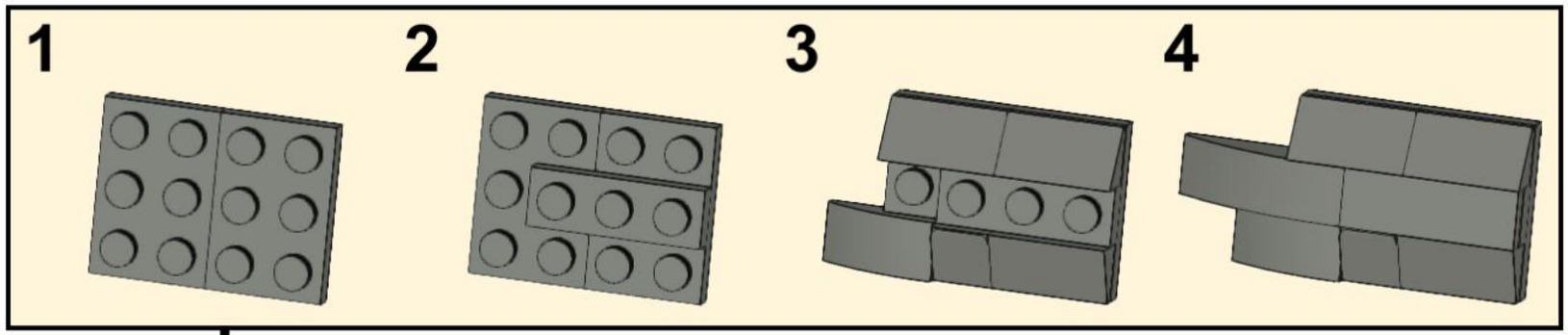

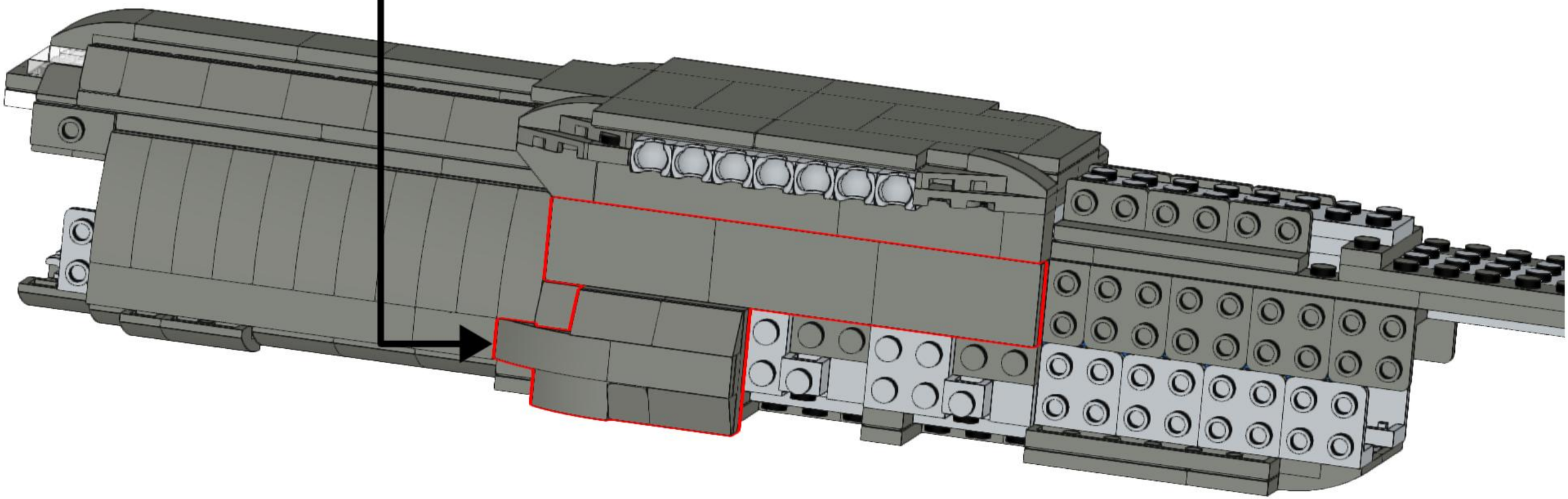

53

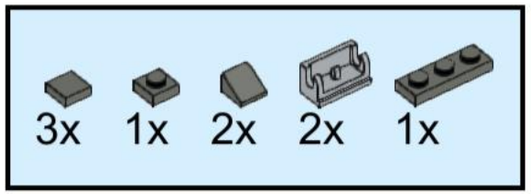

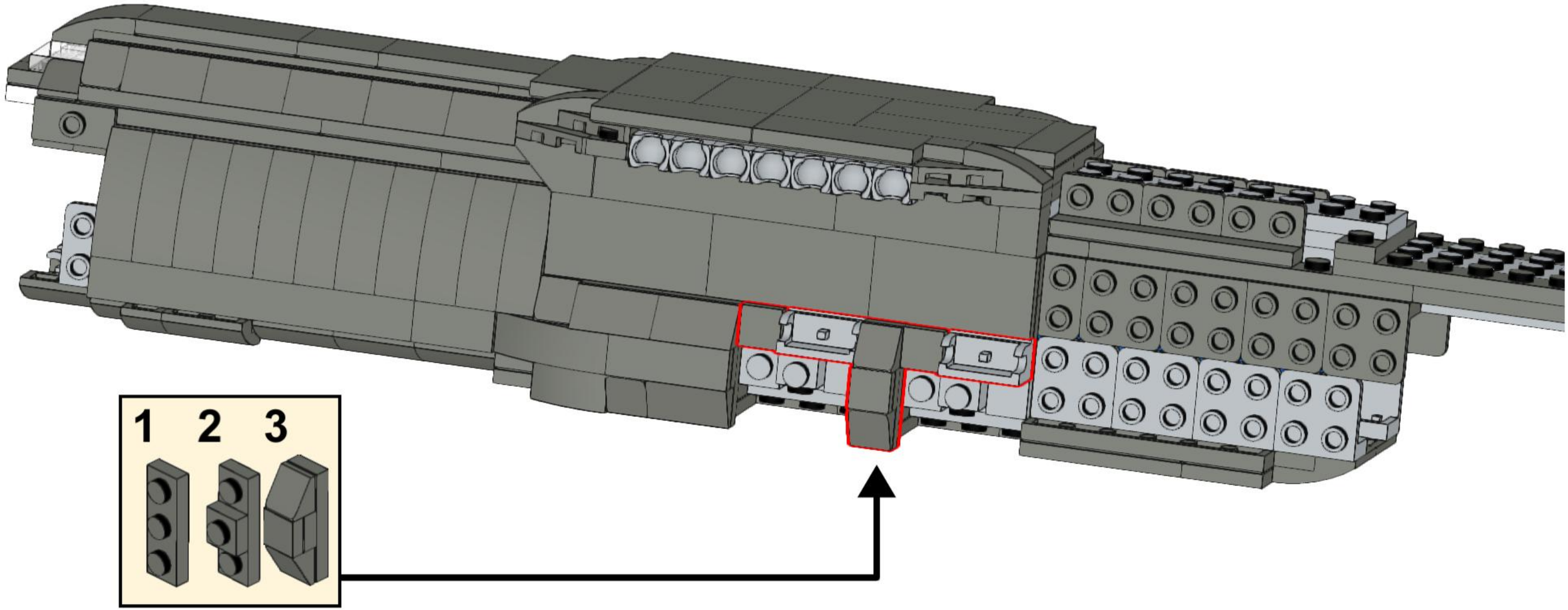

54

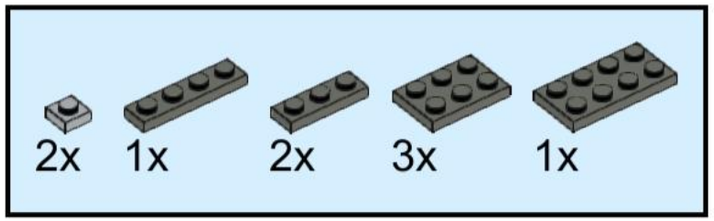

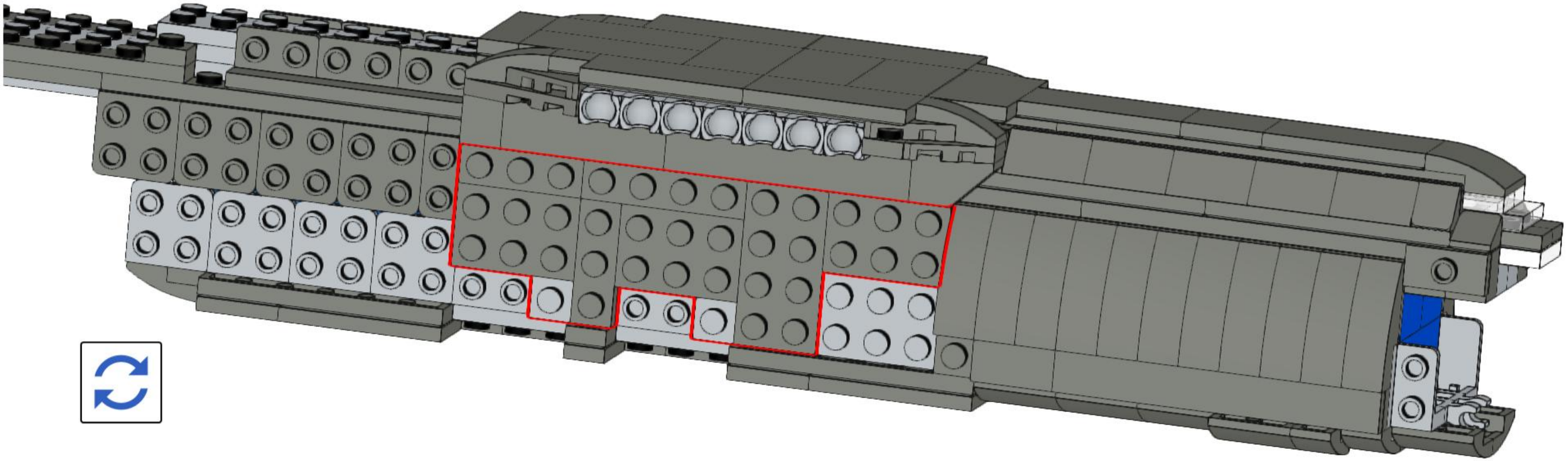

55

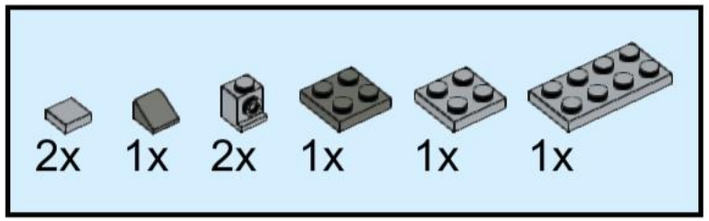

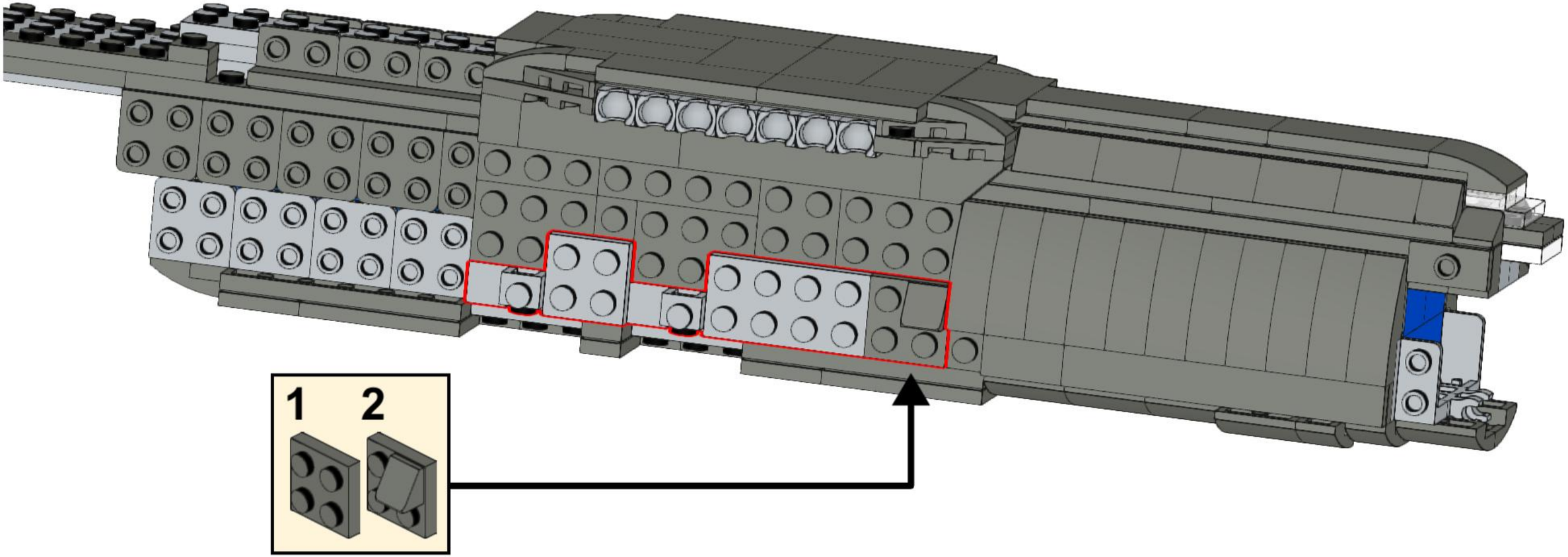

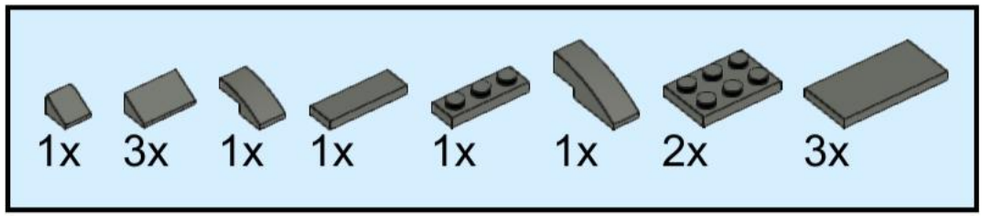
1x
3x
1x
1x
1x
1x
2x
3x

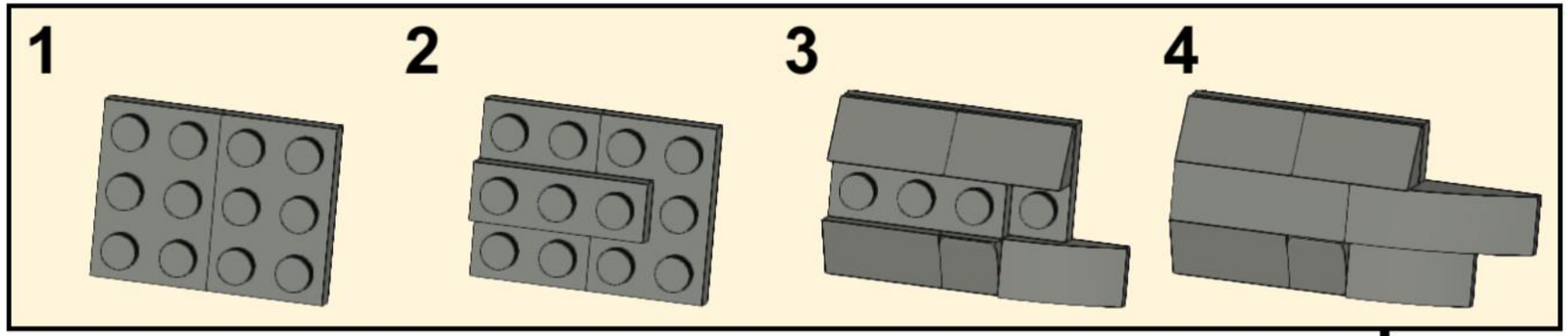
1
2
3
4

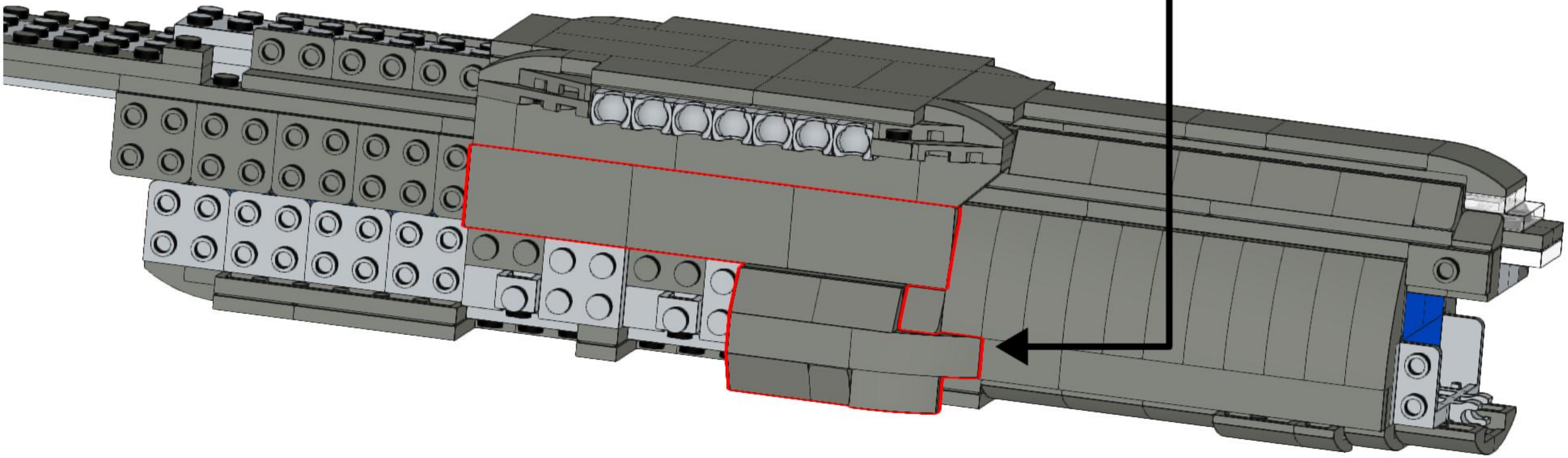

57

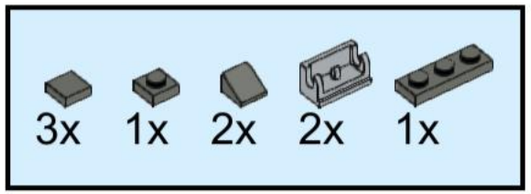

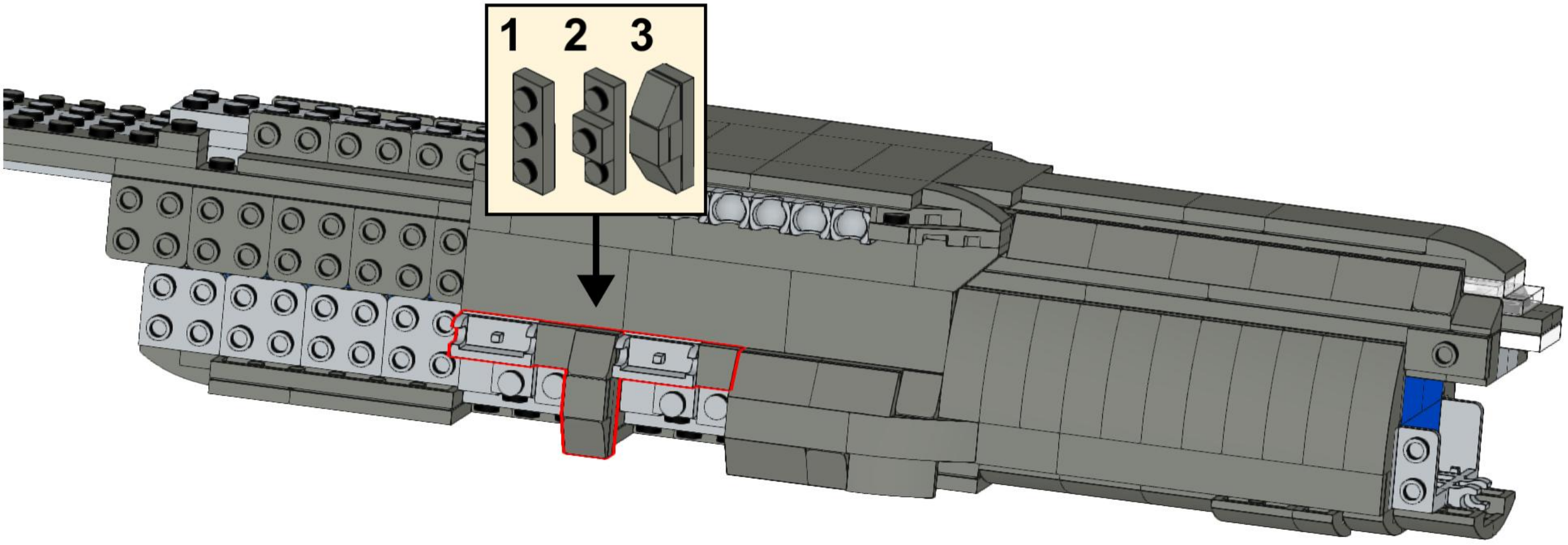

58

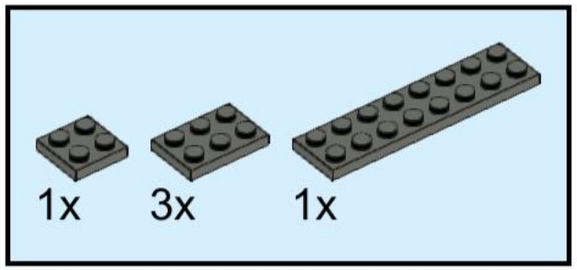

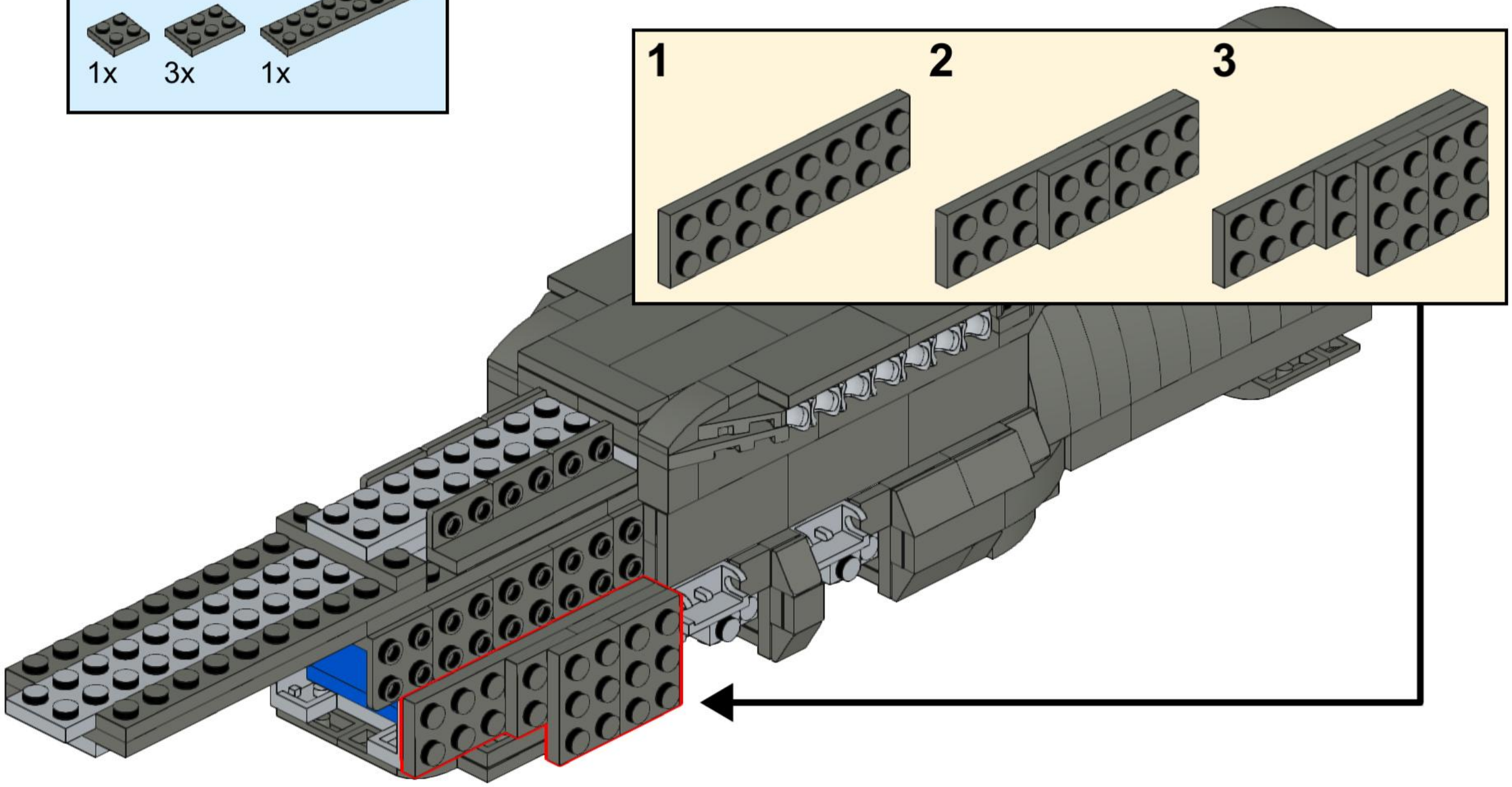

59

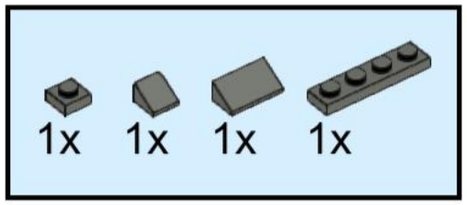

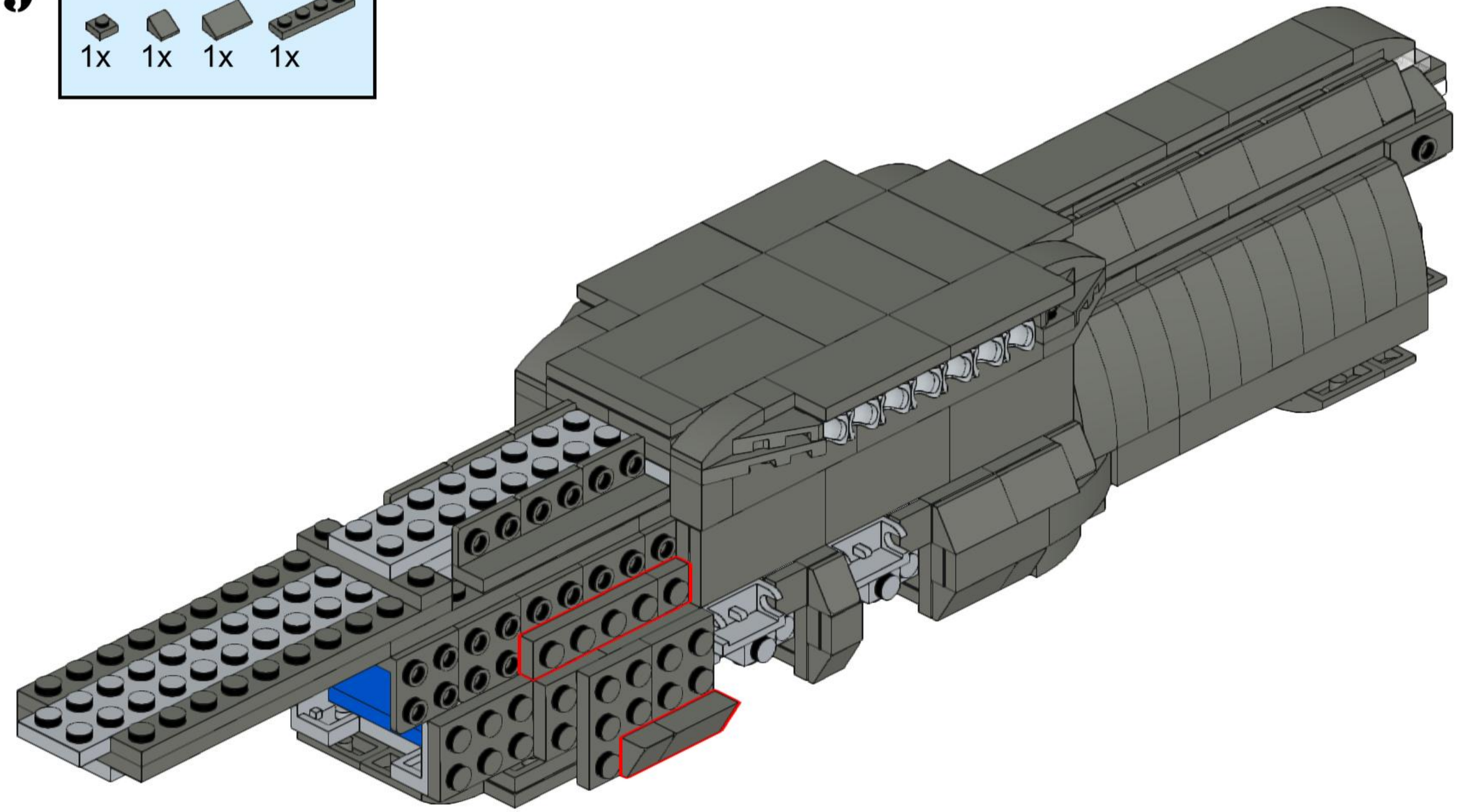

60

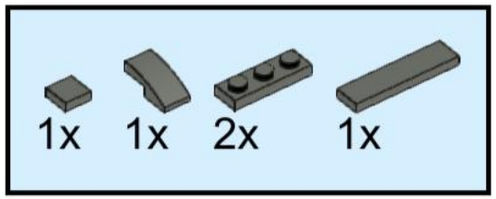

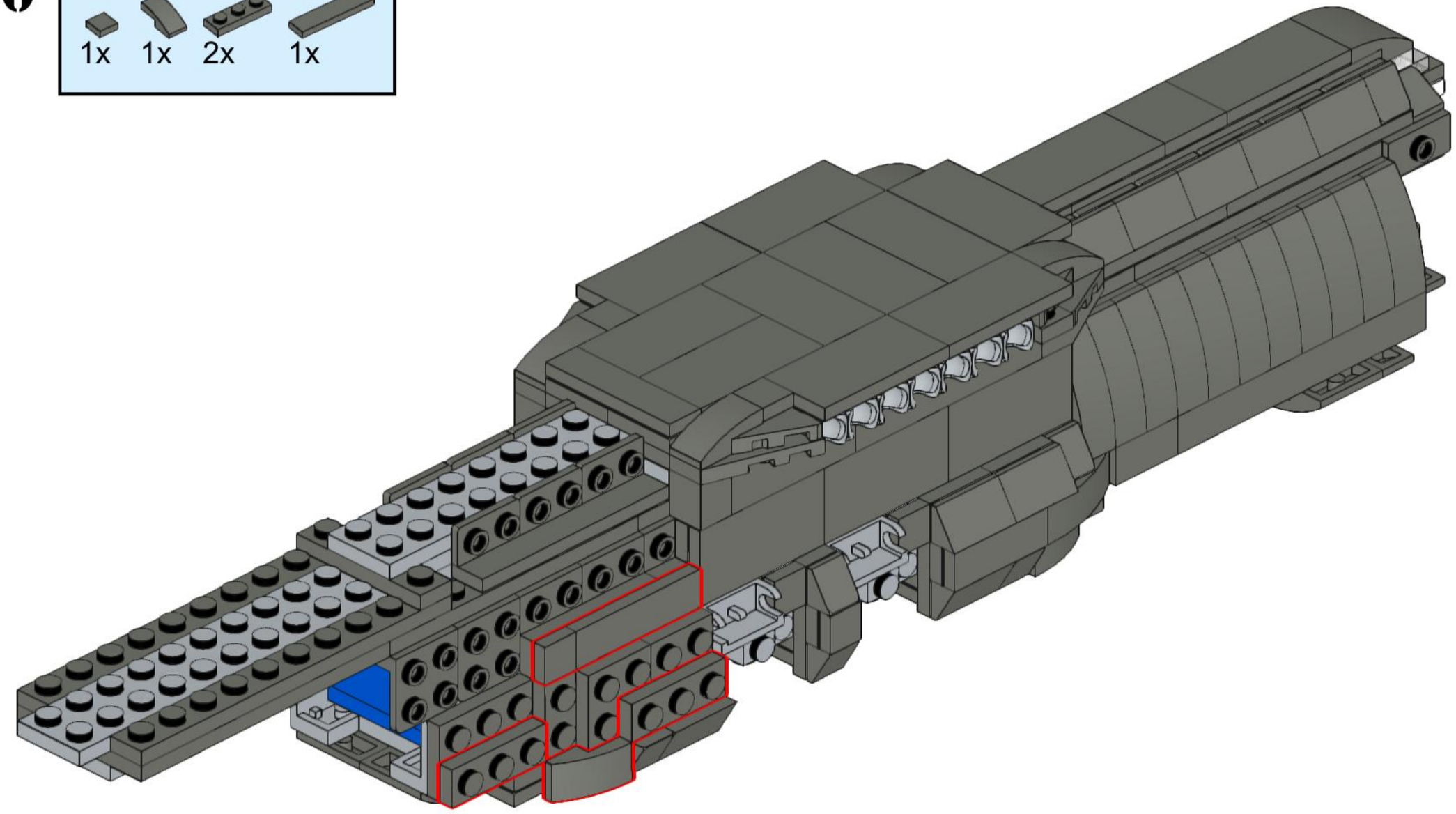

61

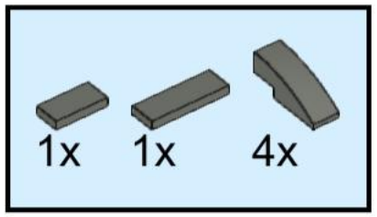

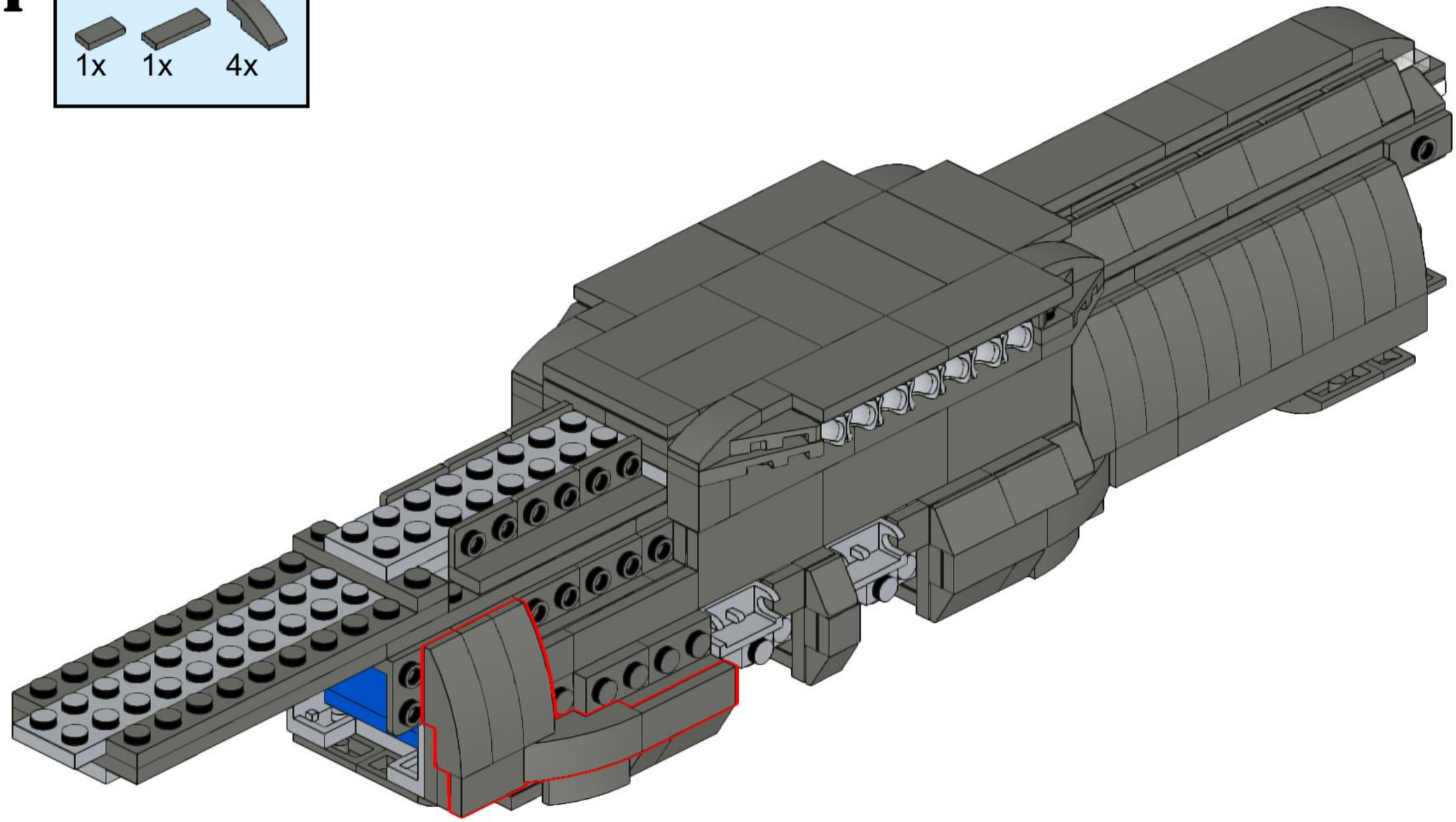

62

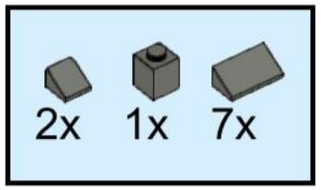

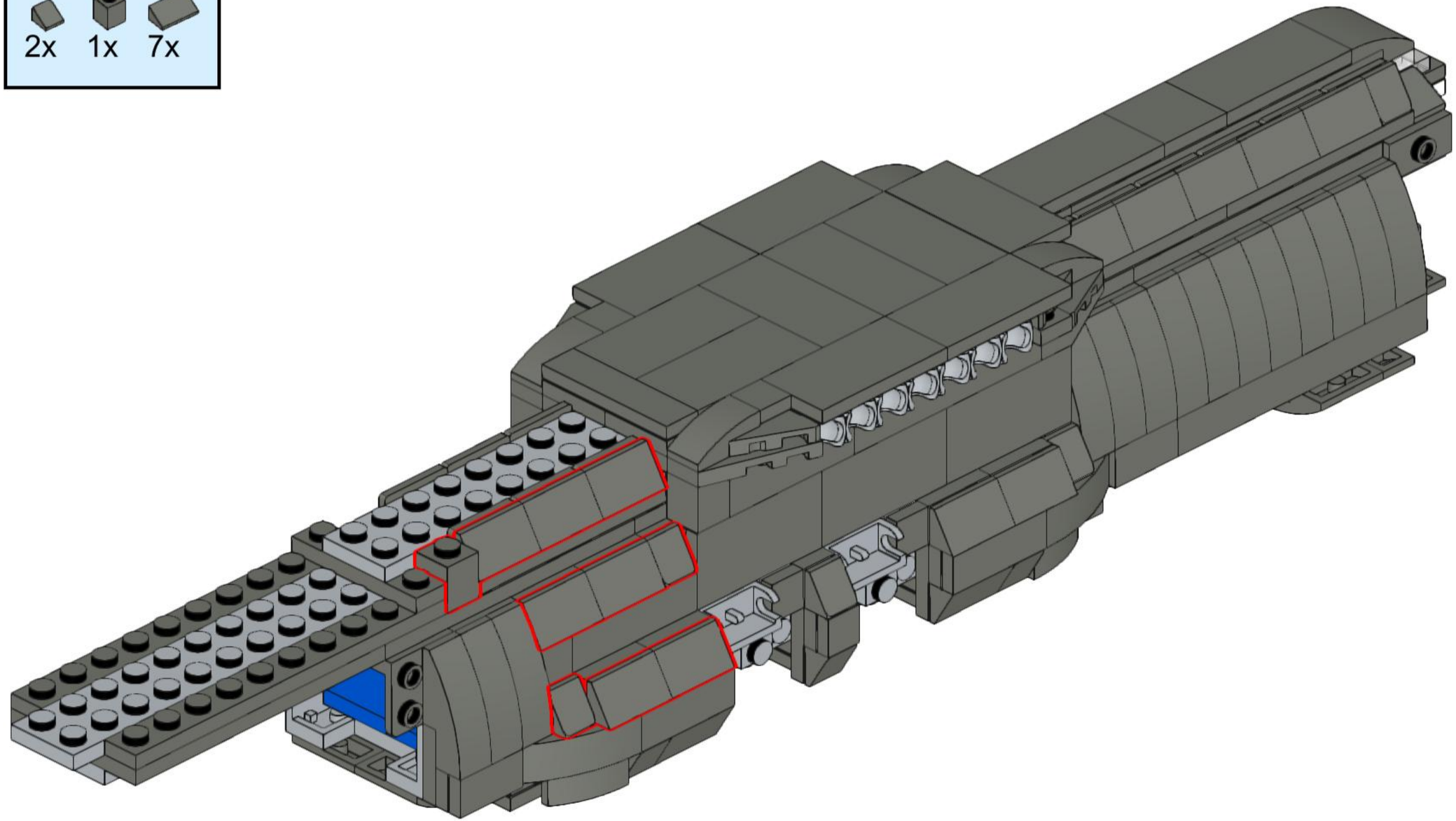

63

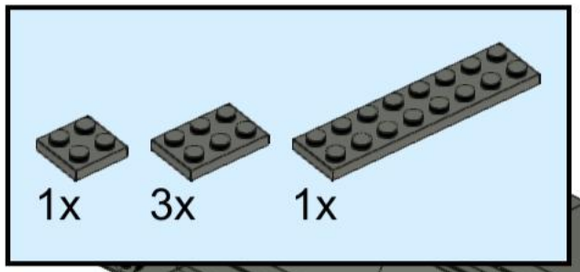

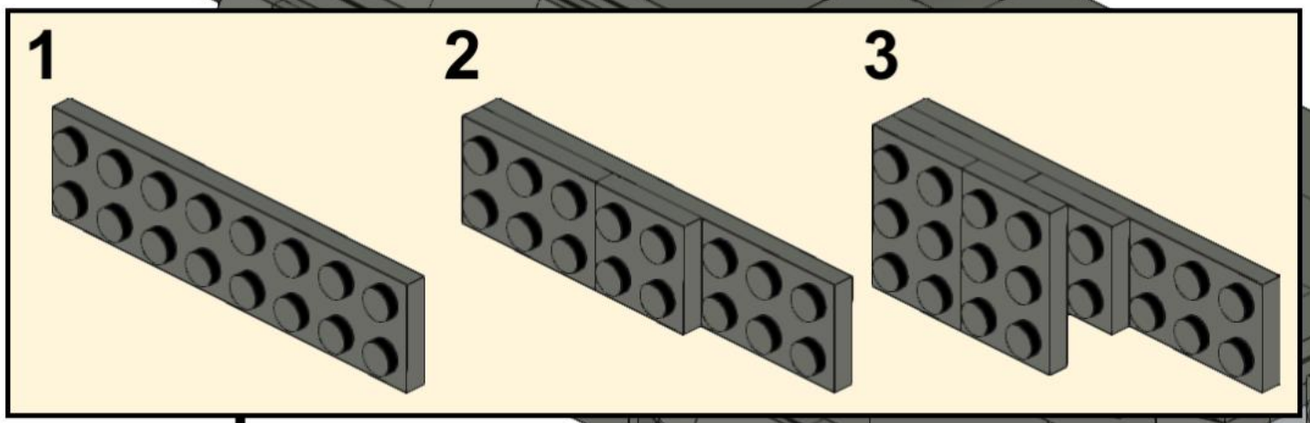

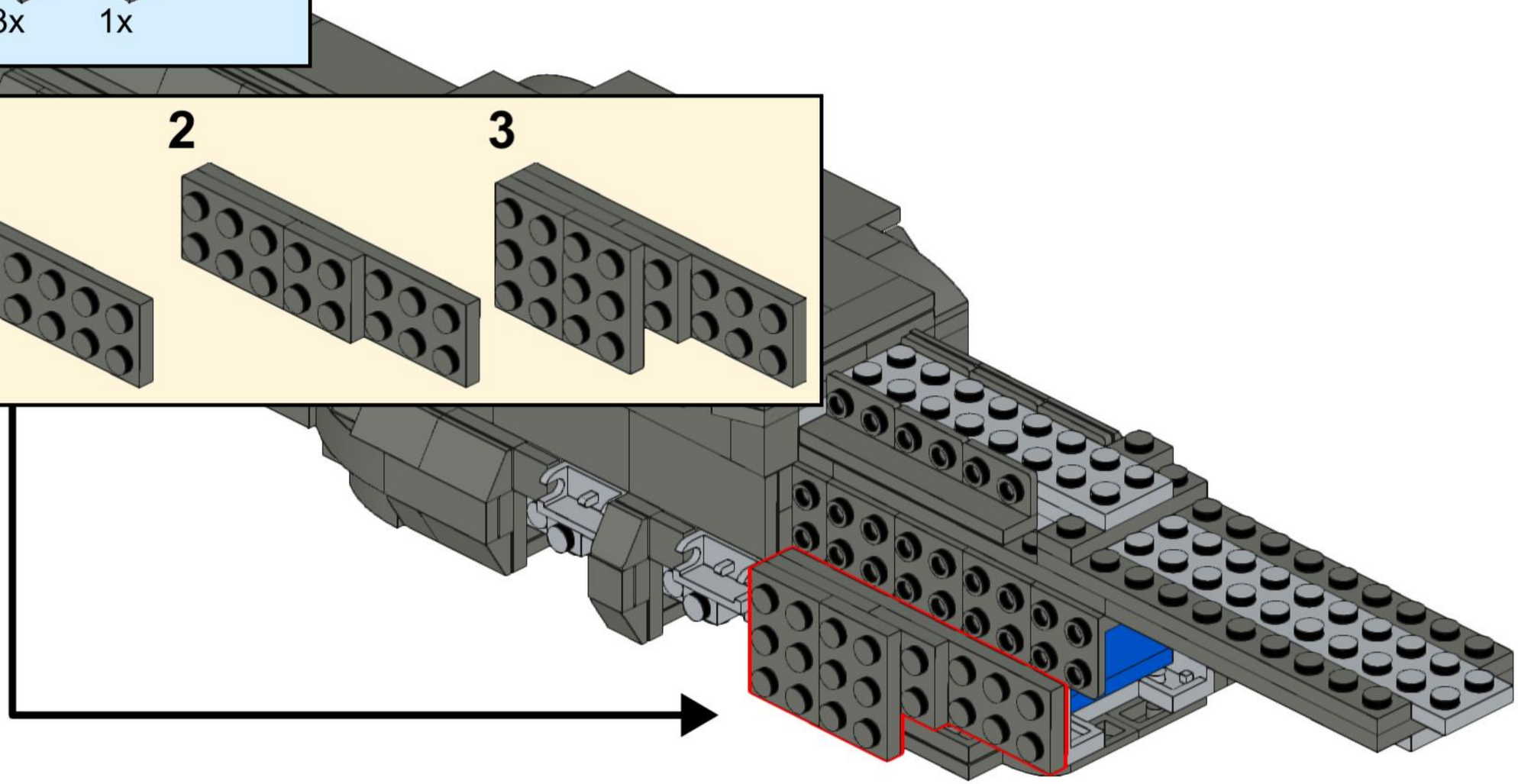

64

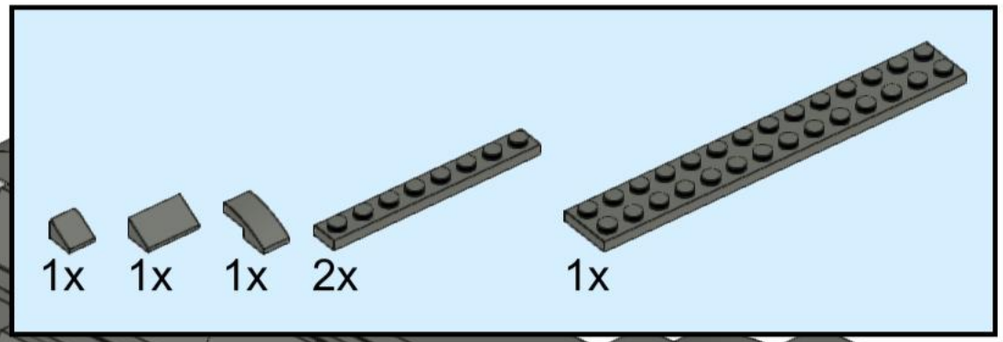

65

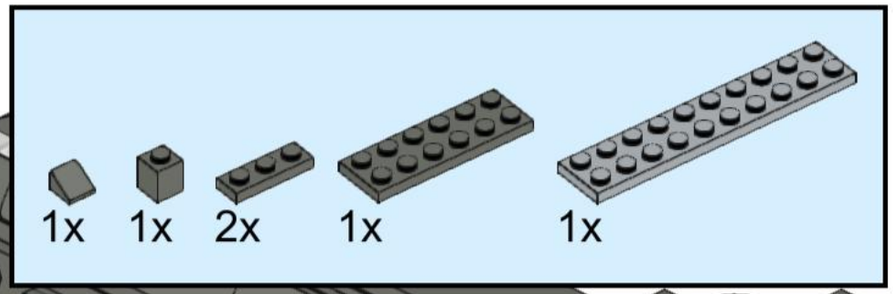

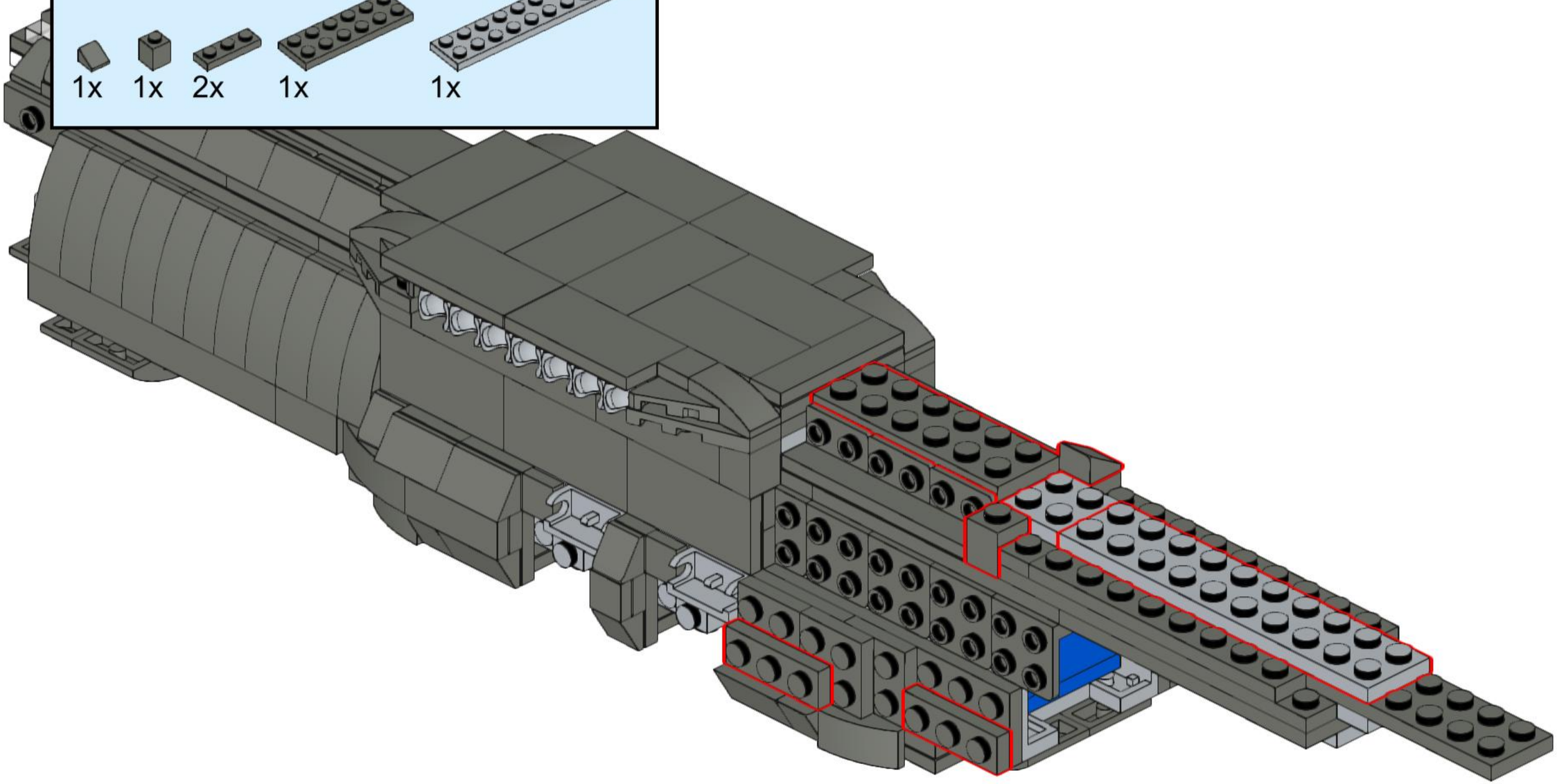

66

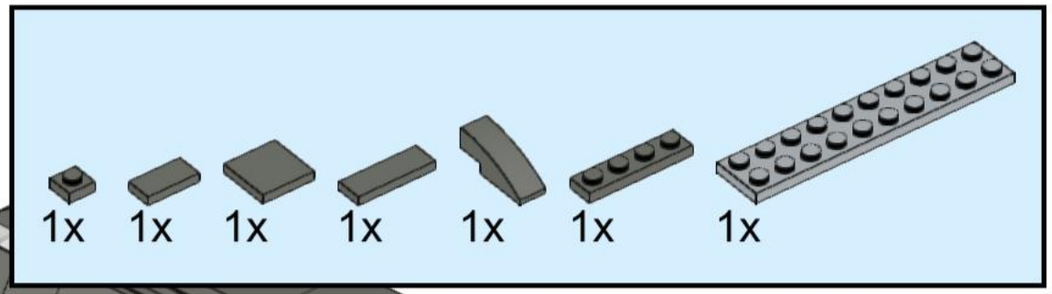

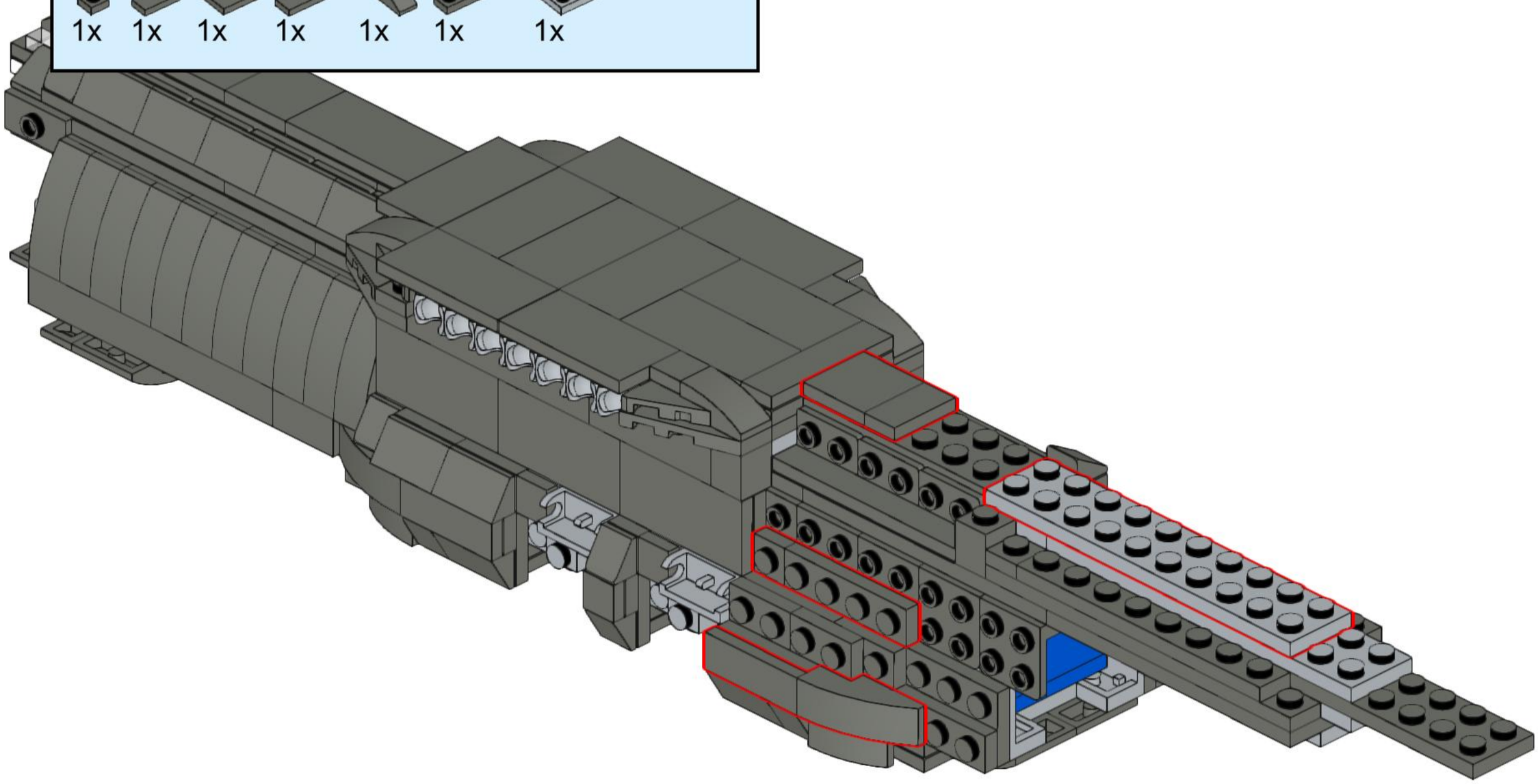

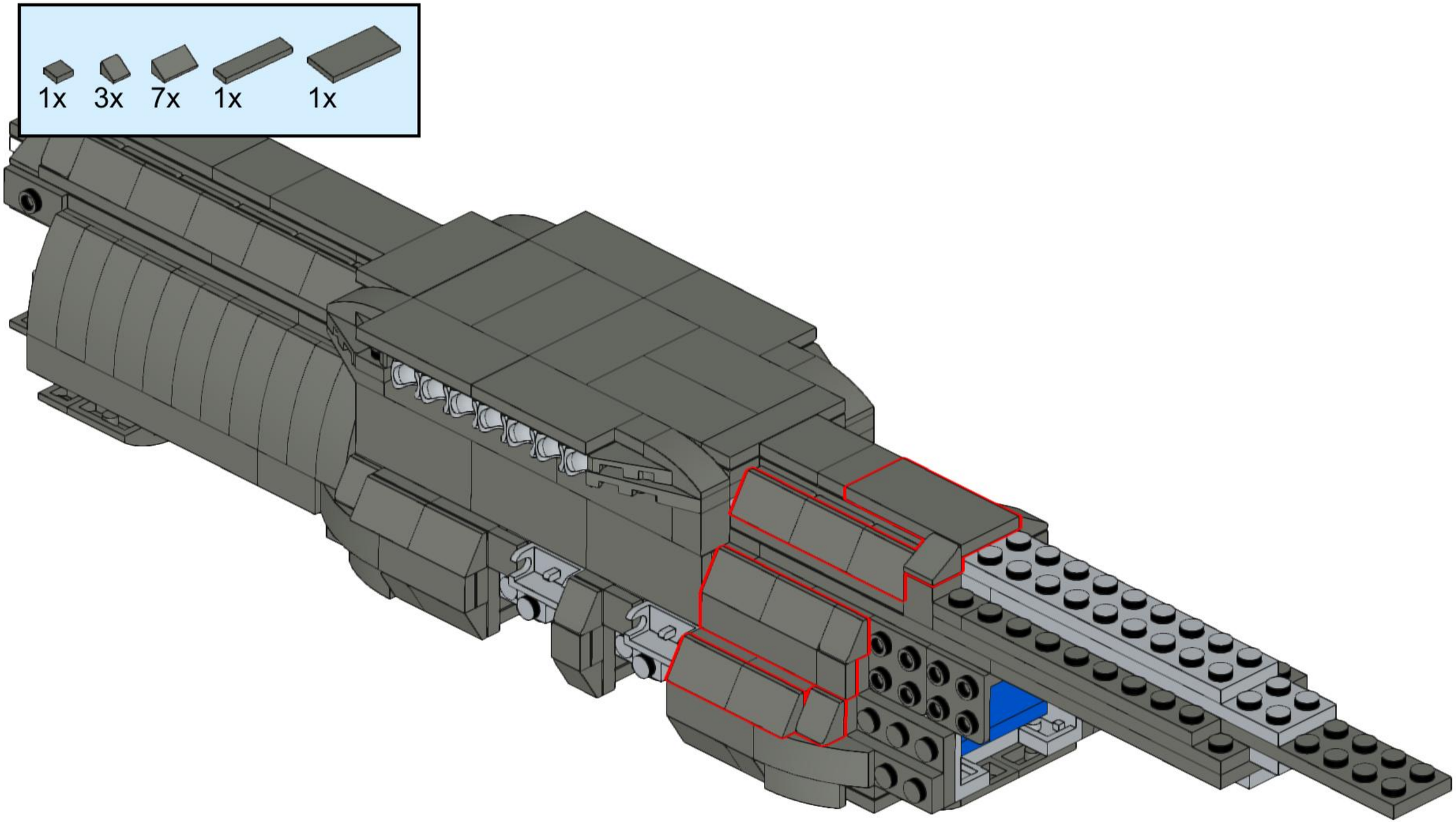
1x
3x
7x
1x
1x

68

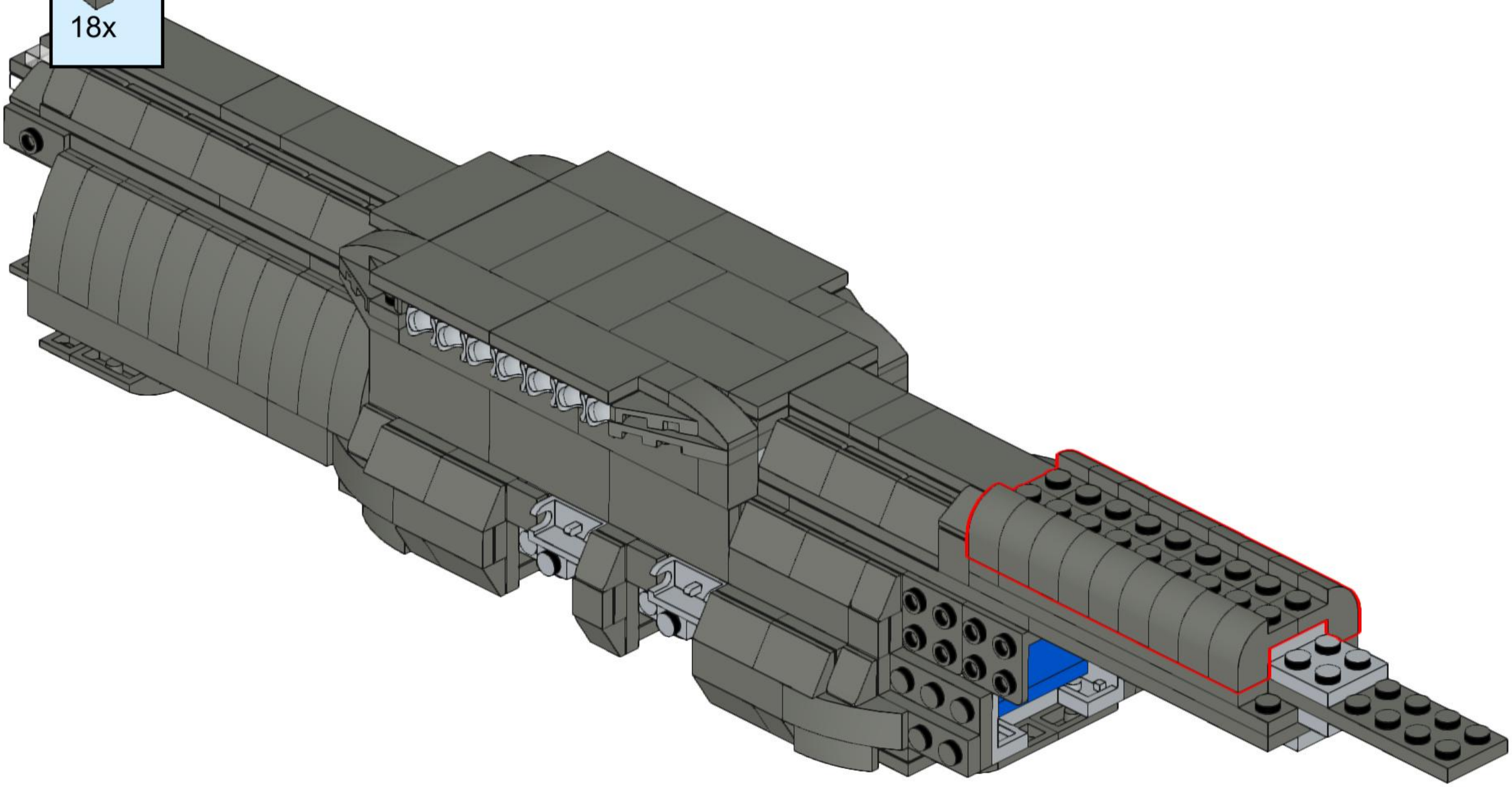

69

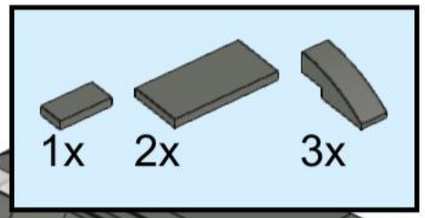

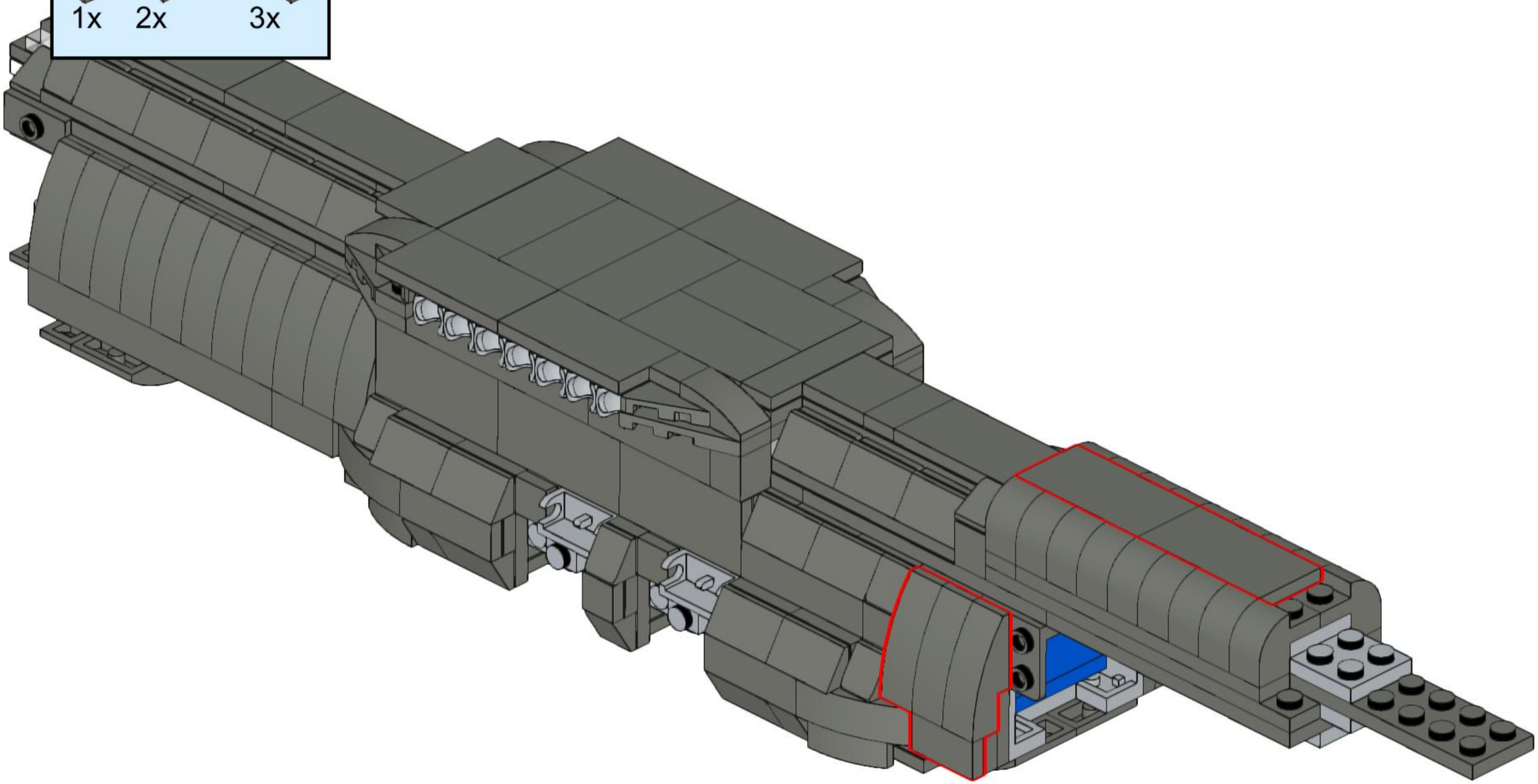

70

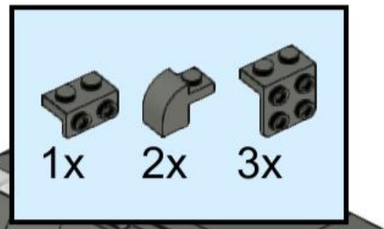

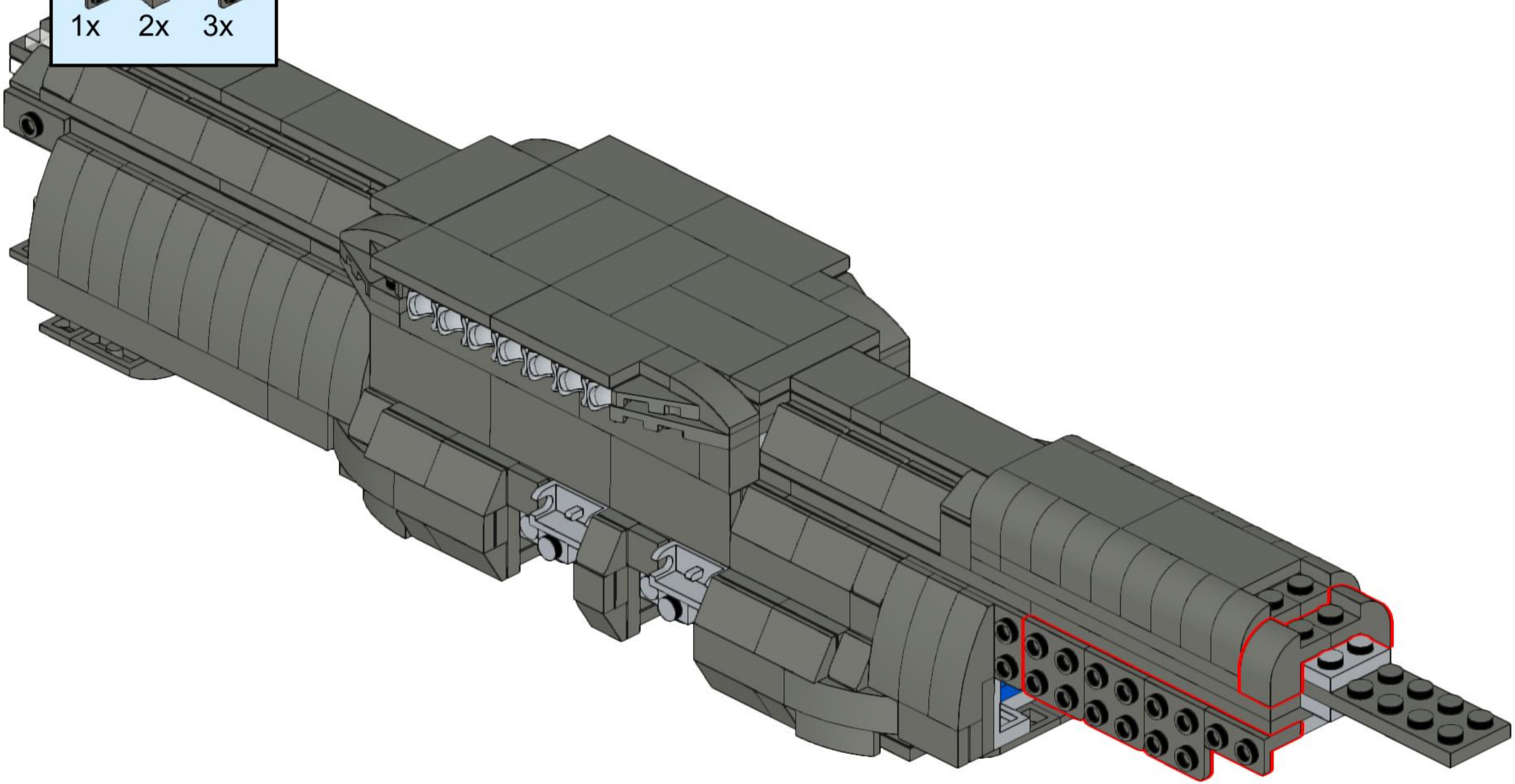

71

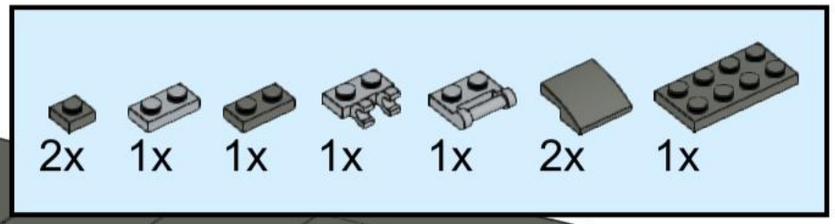

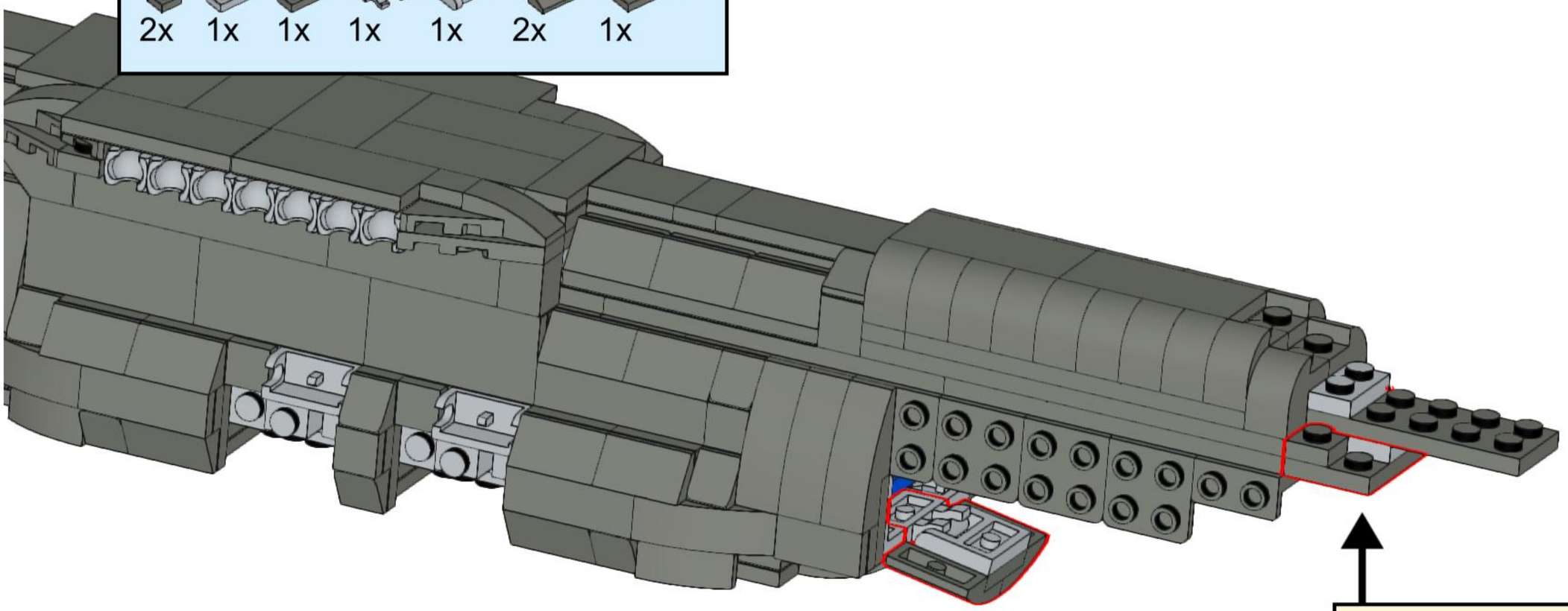

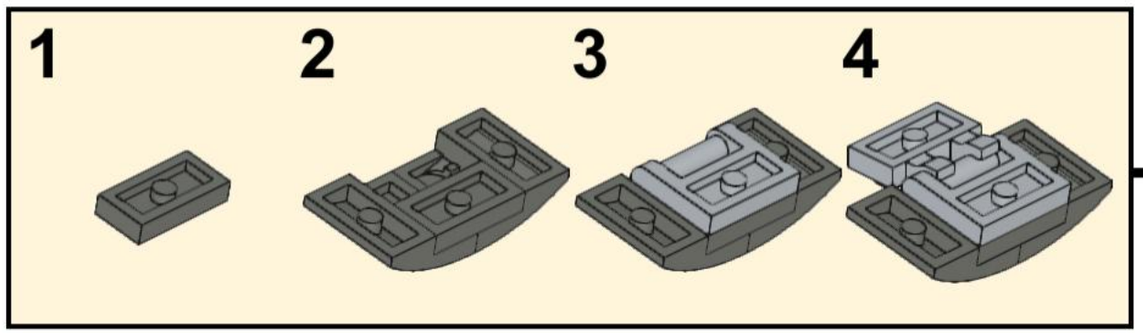

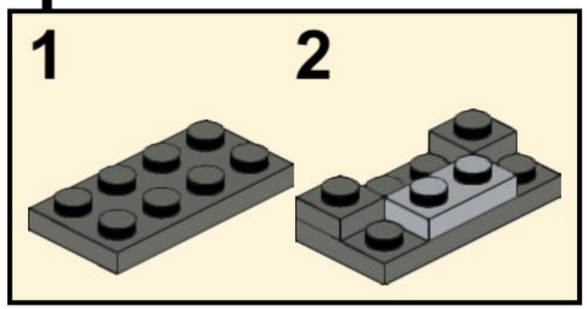

72

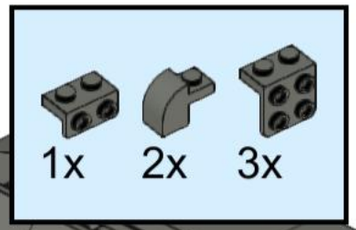

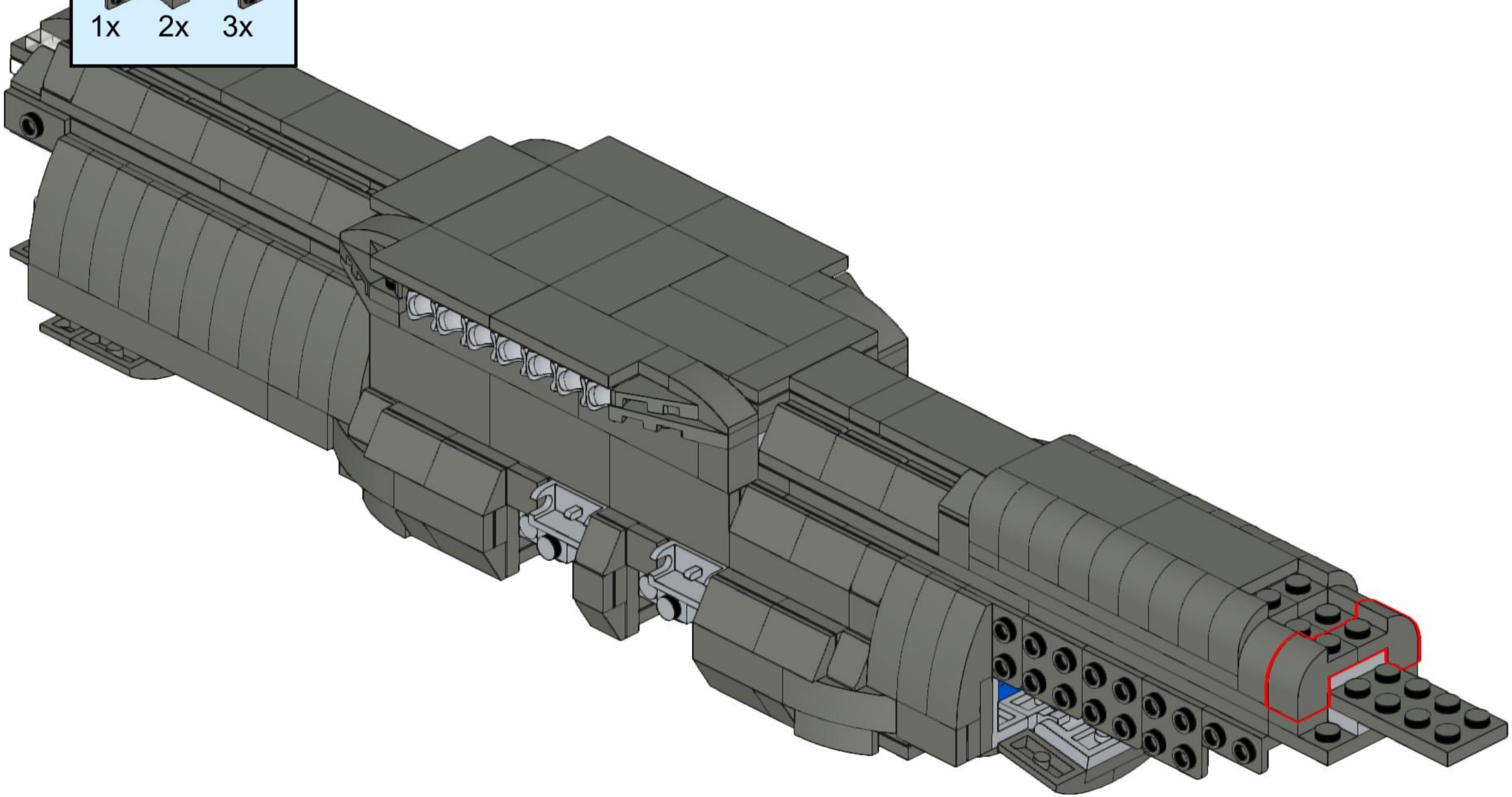

73

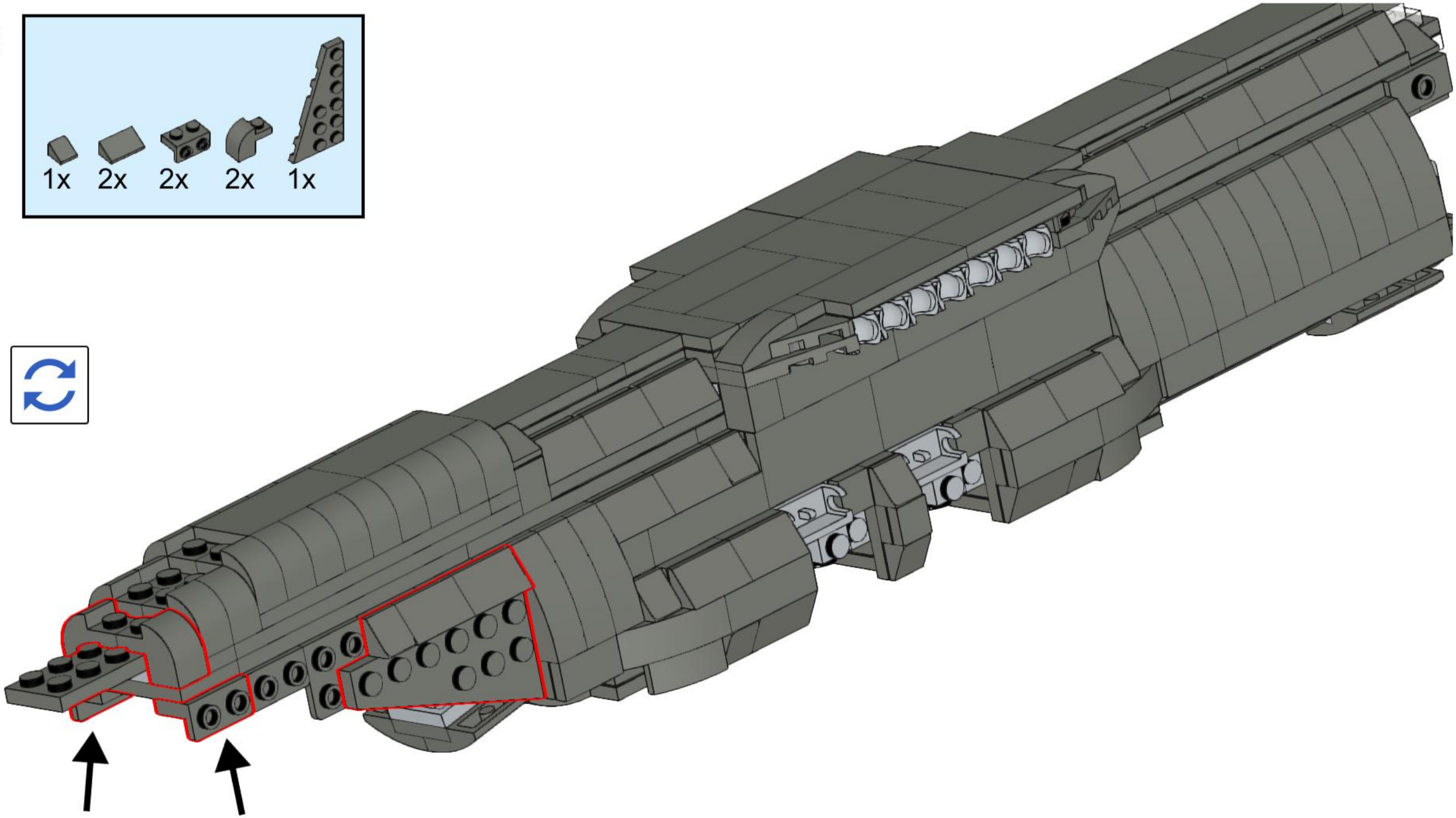

74

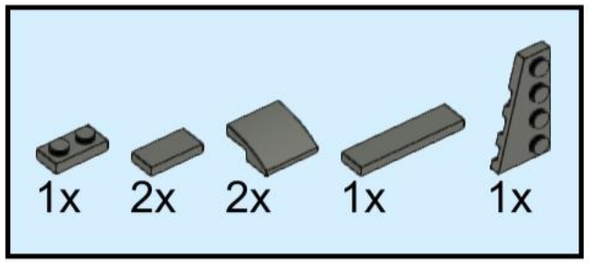

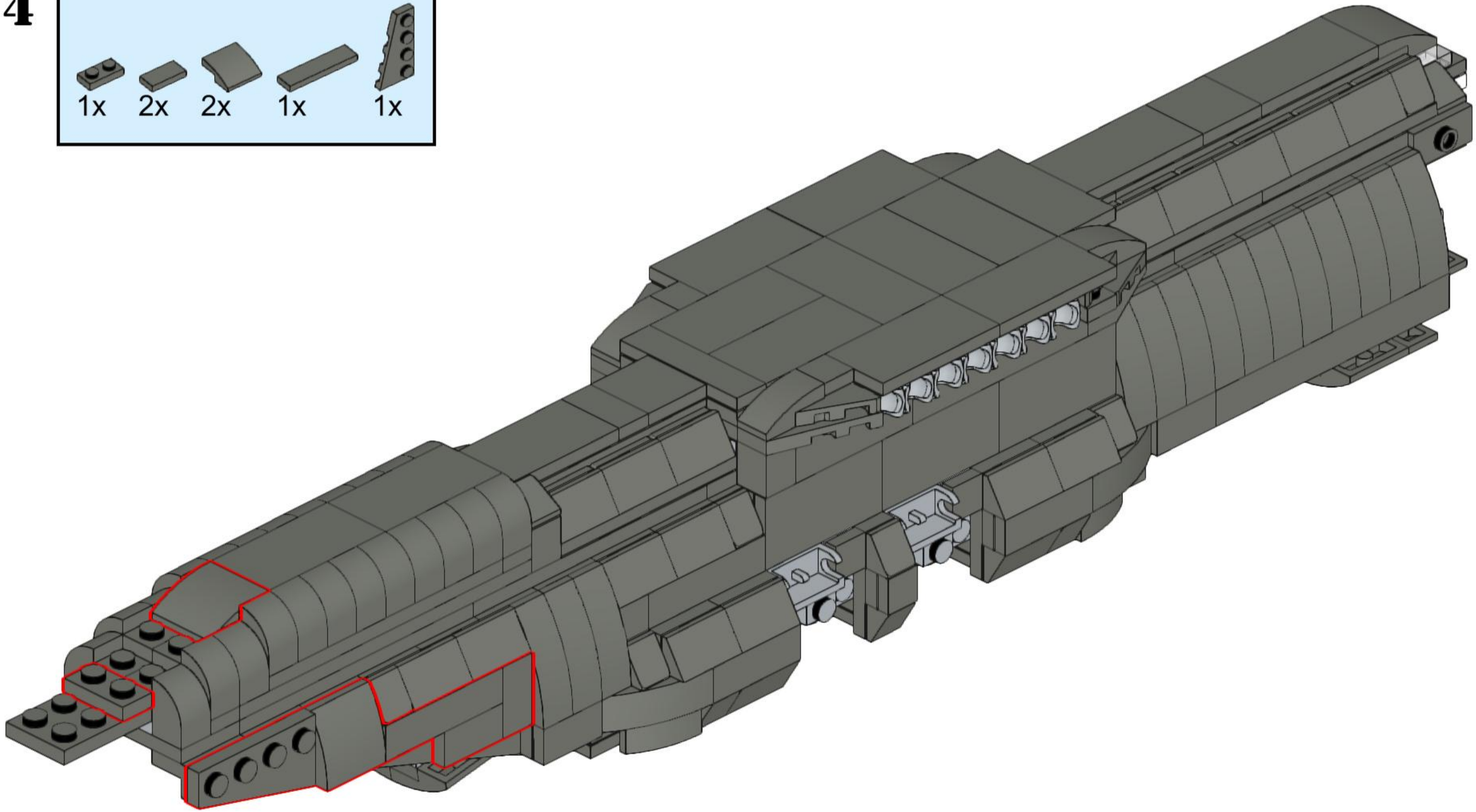

75

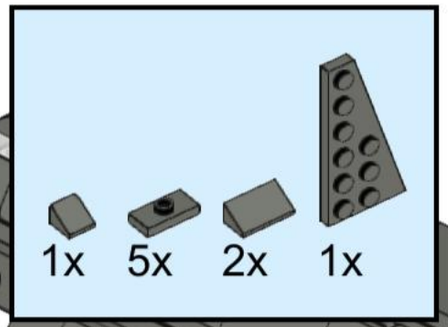

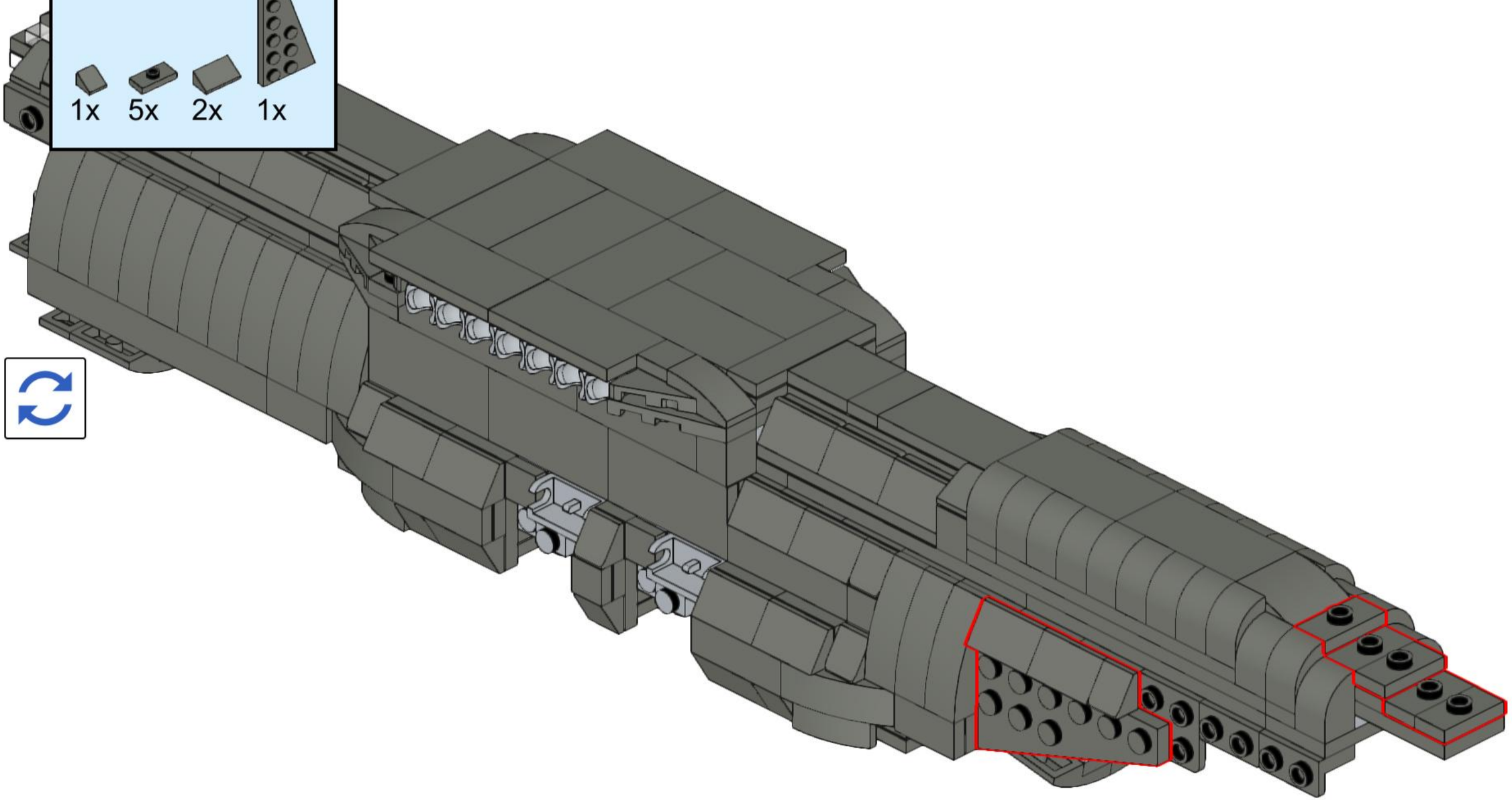

76

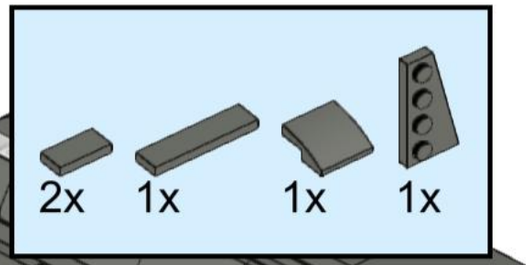

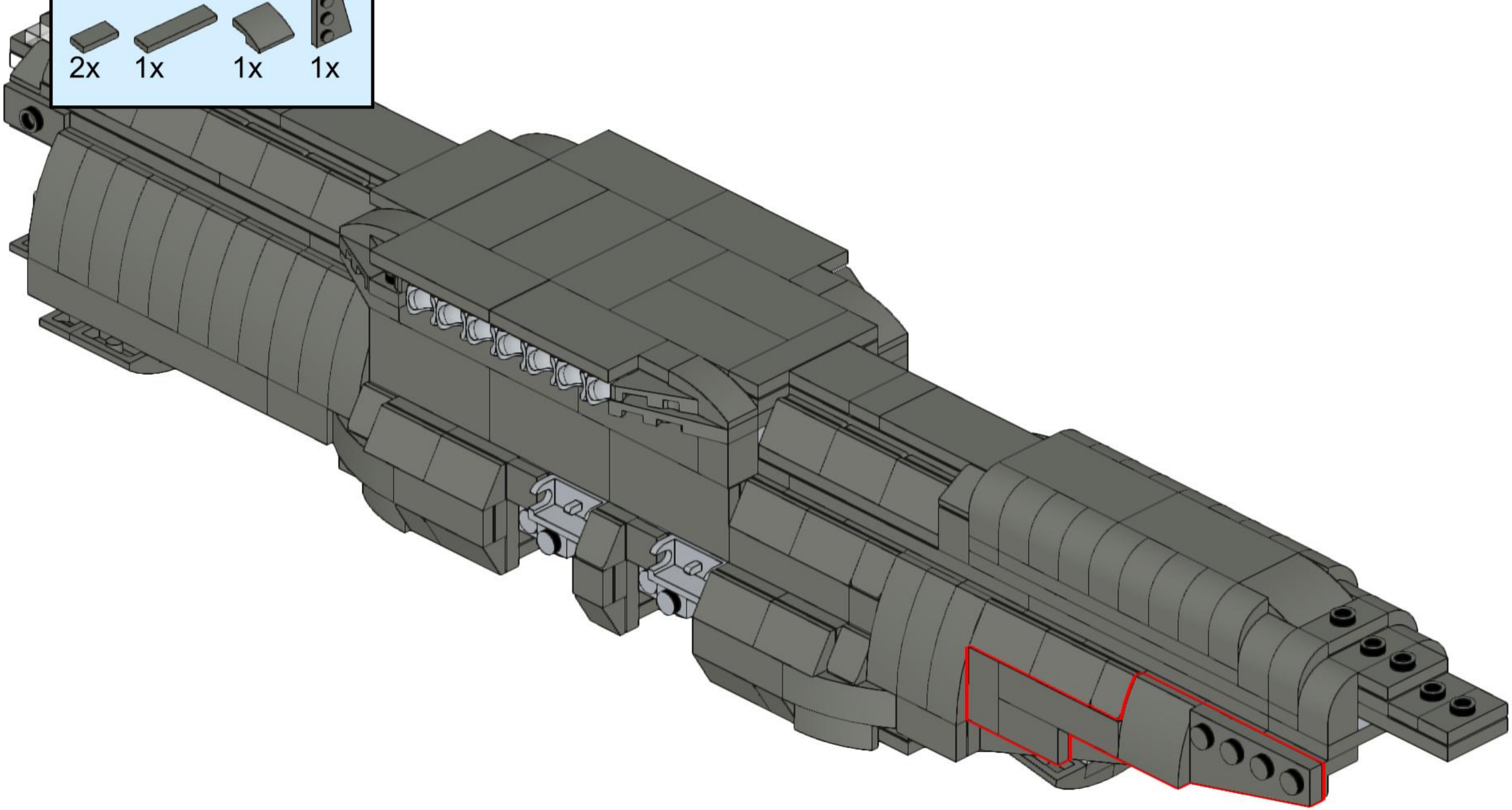

77

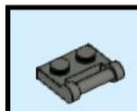

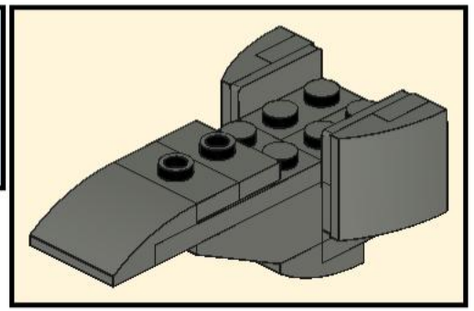

78

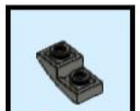

79

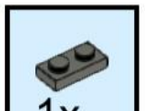

80

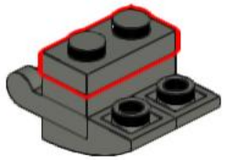

81

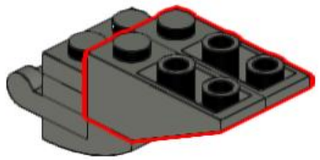

82

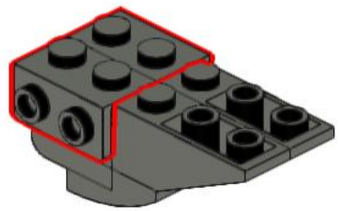

83

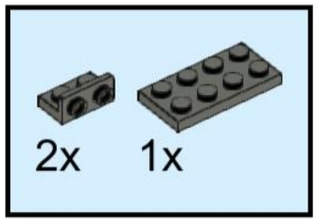

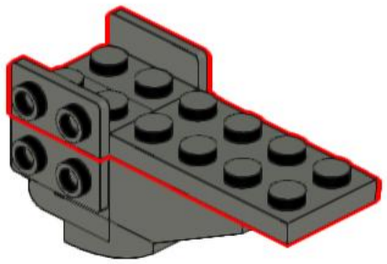

84

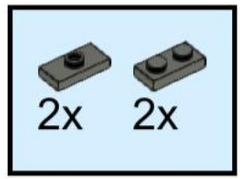

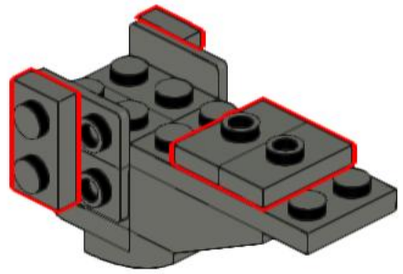

85

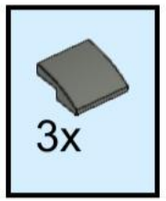

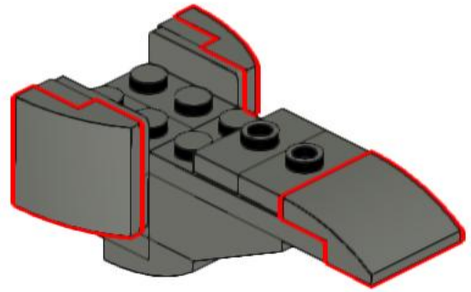

86

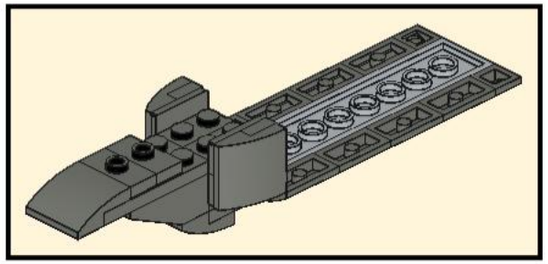

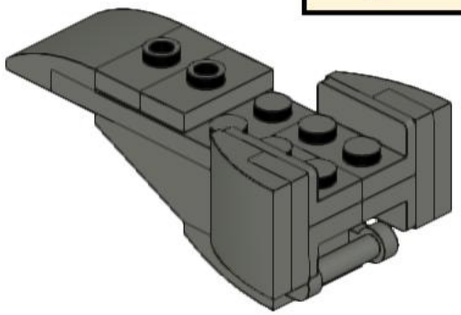

87

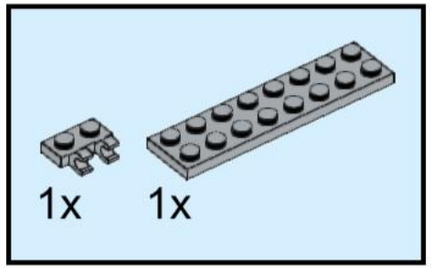

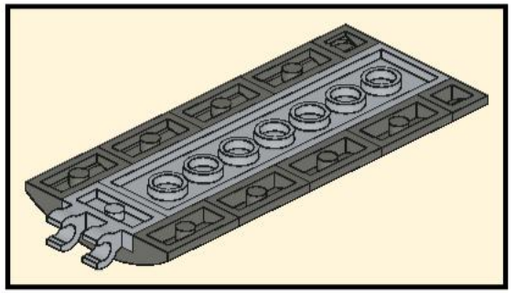

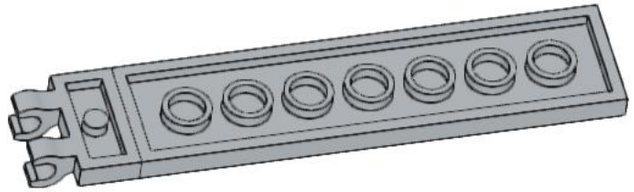

88

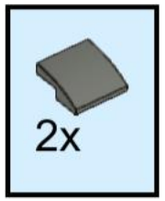

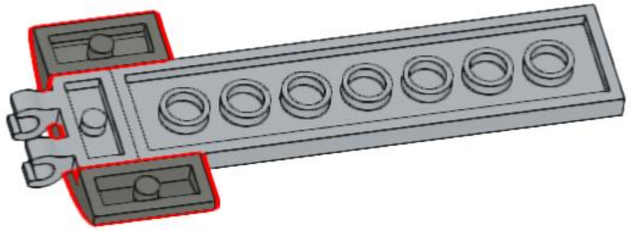

89

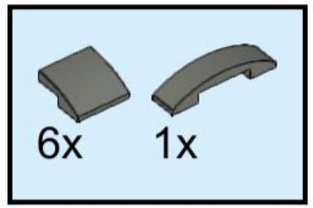

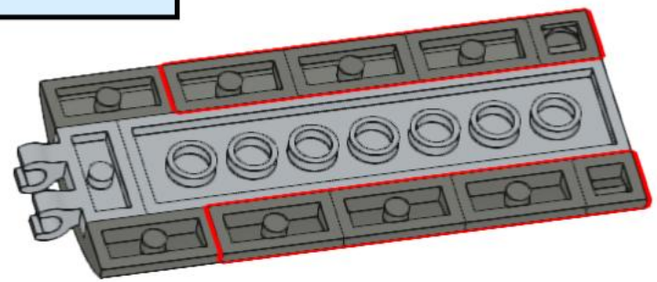

90

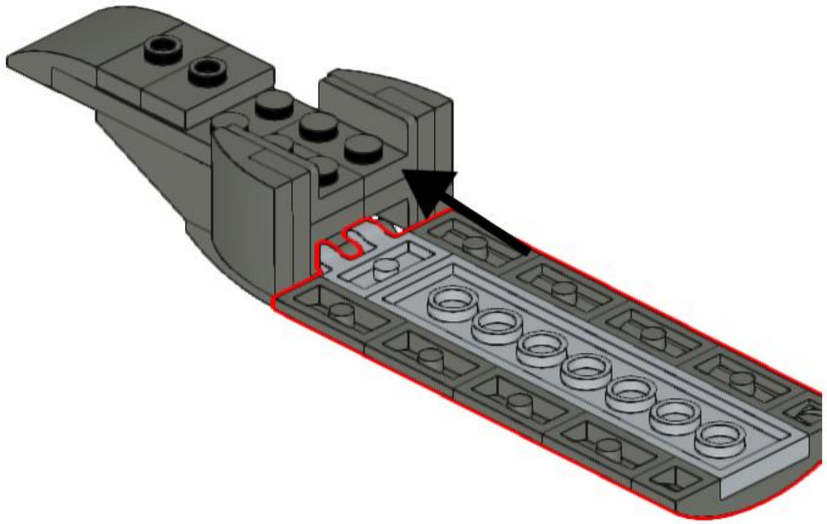

91

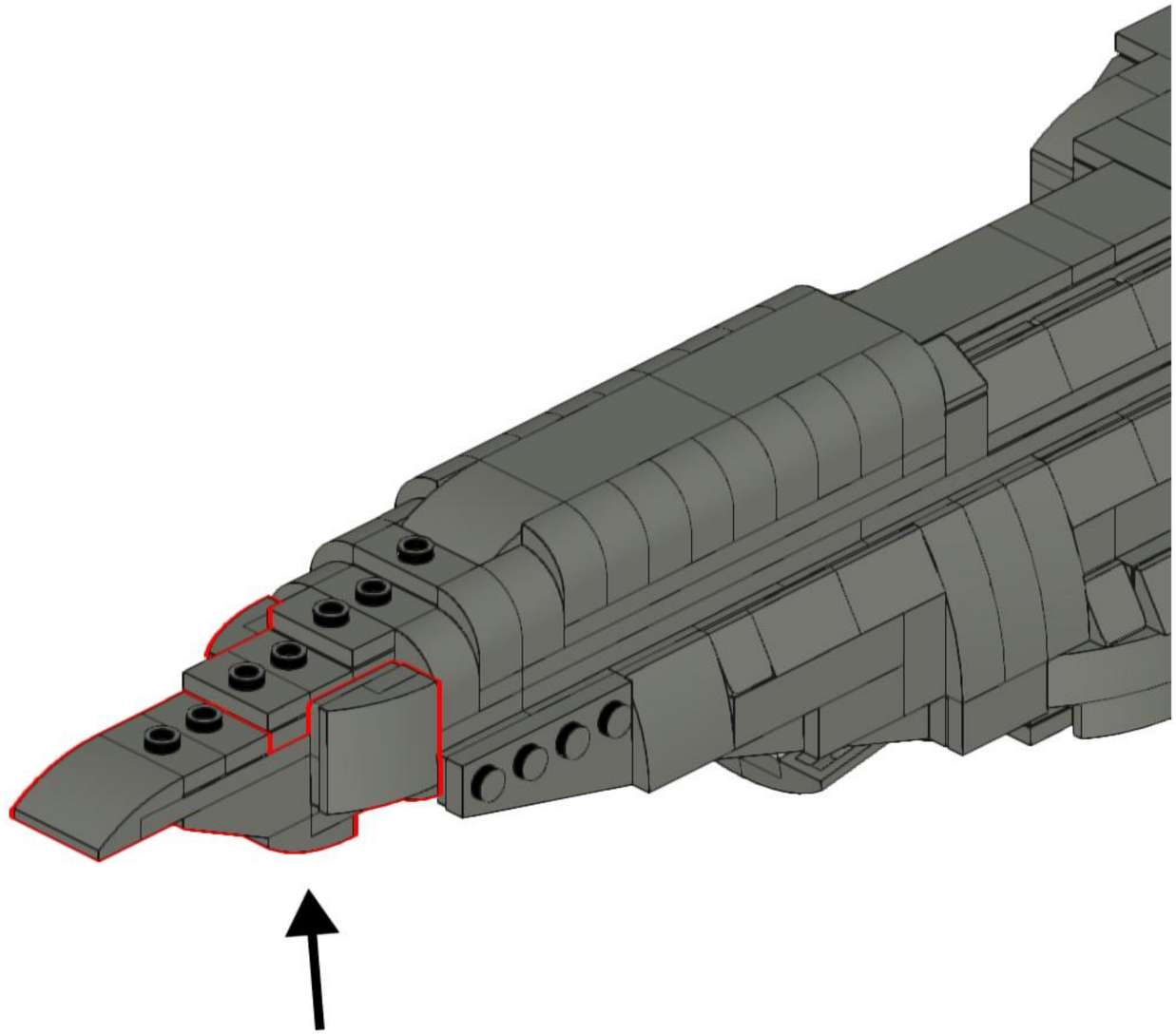

92

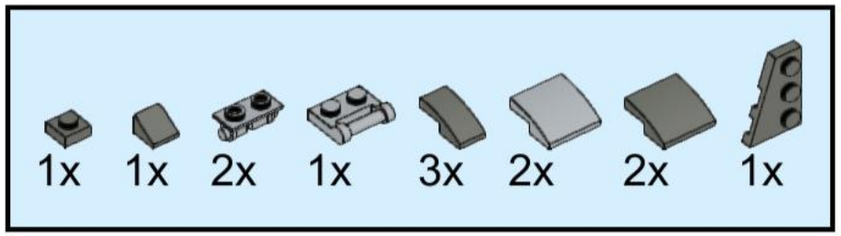

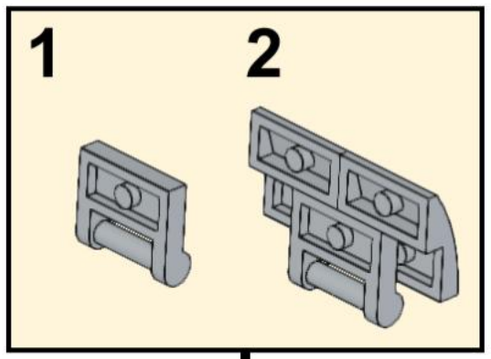

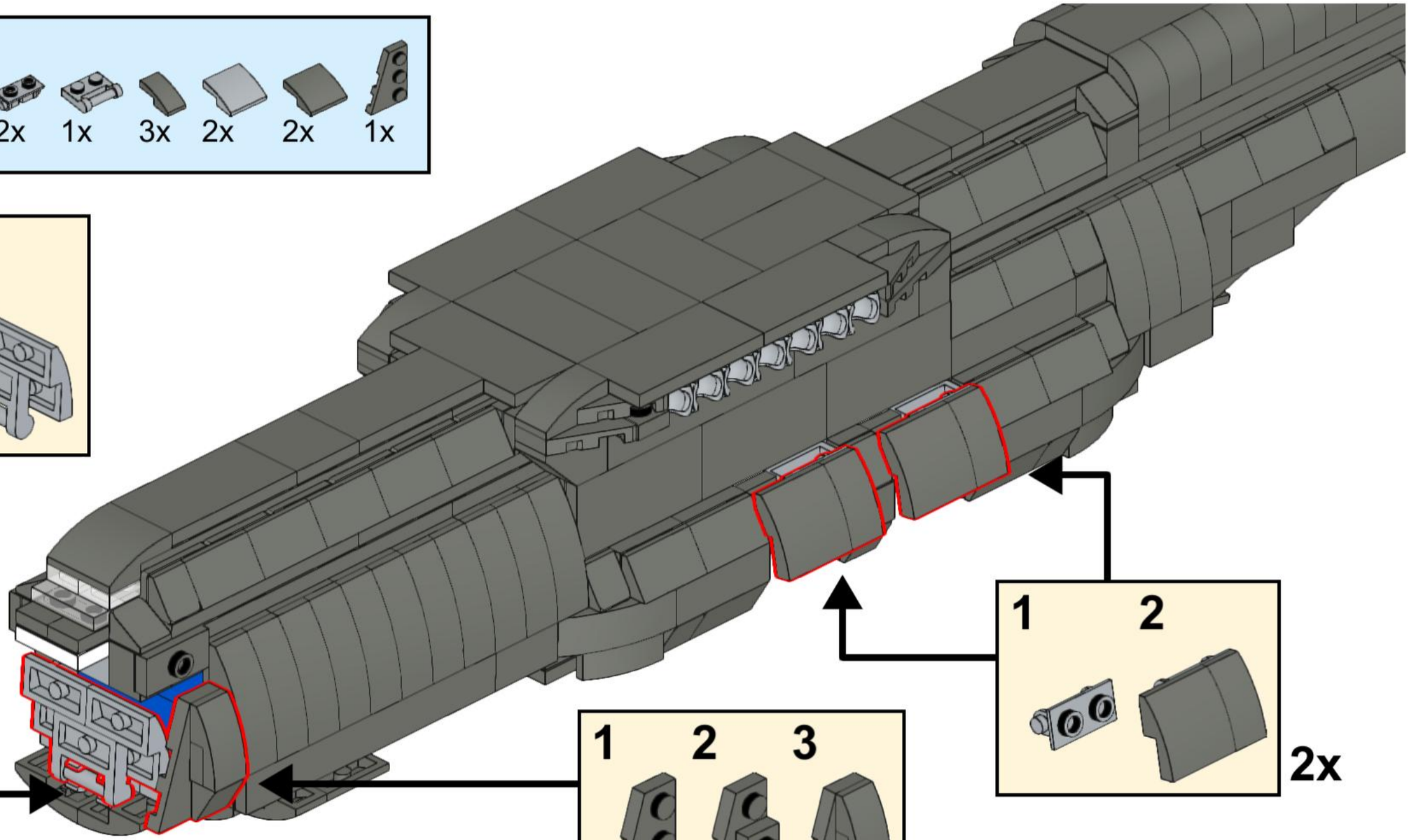

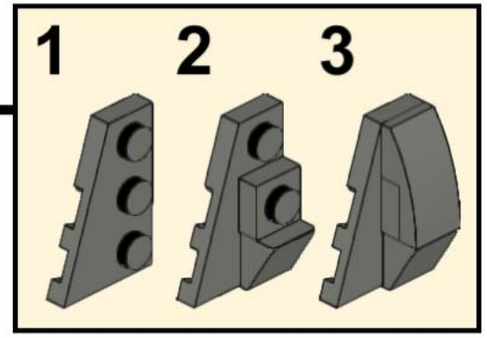

2x

1x
1x
2x
3x
2x
1x

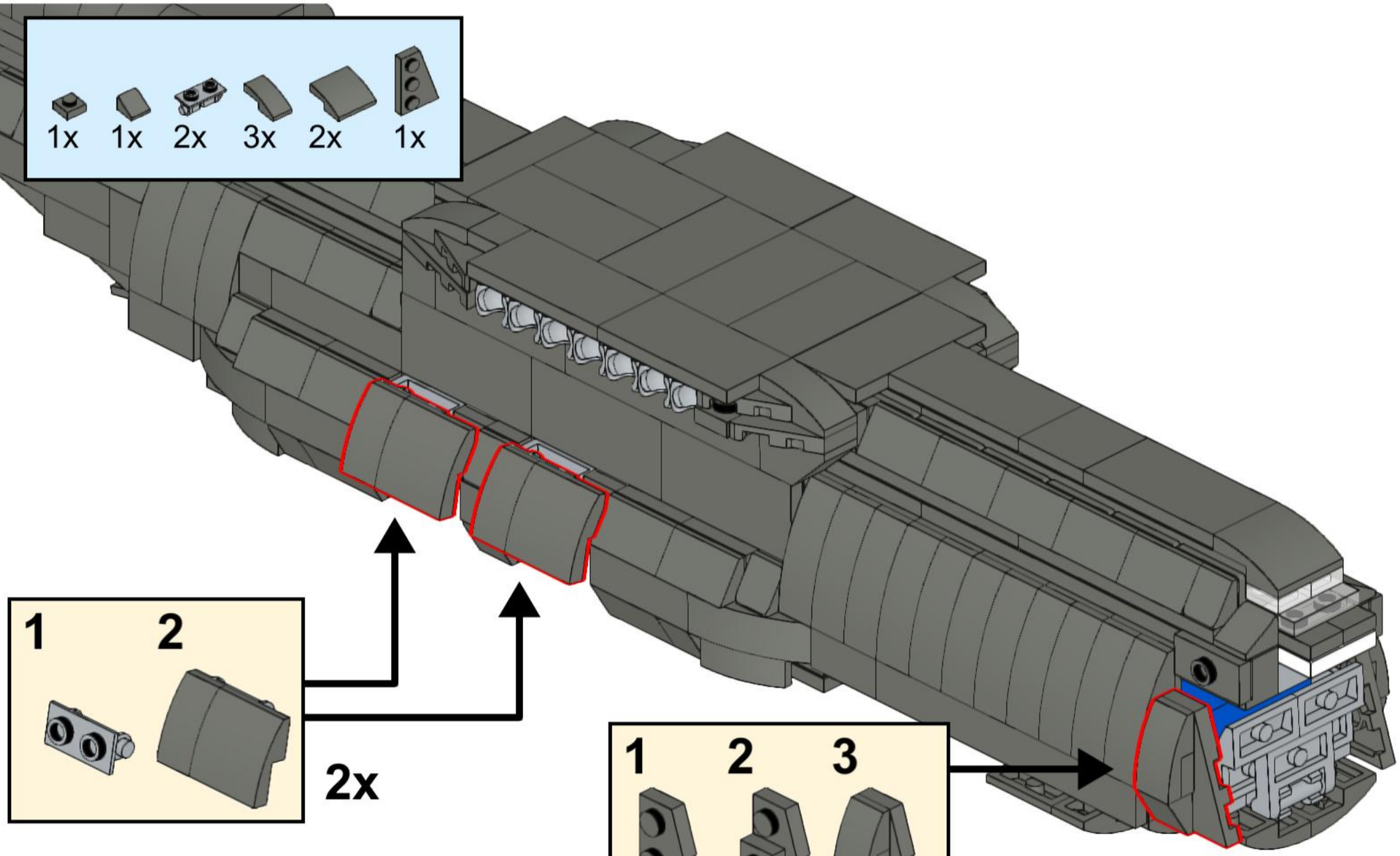

1
2
2x

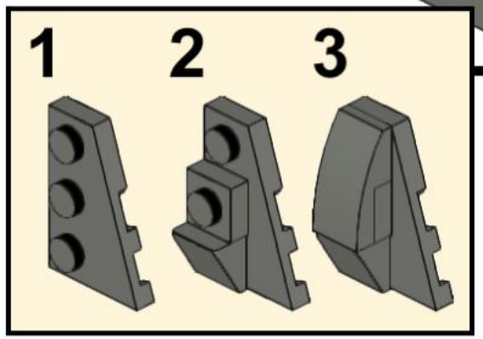
1
2
3

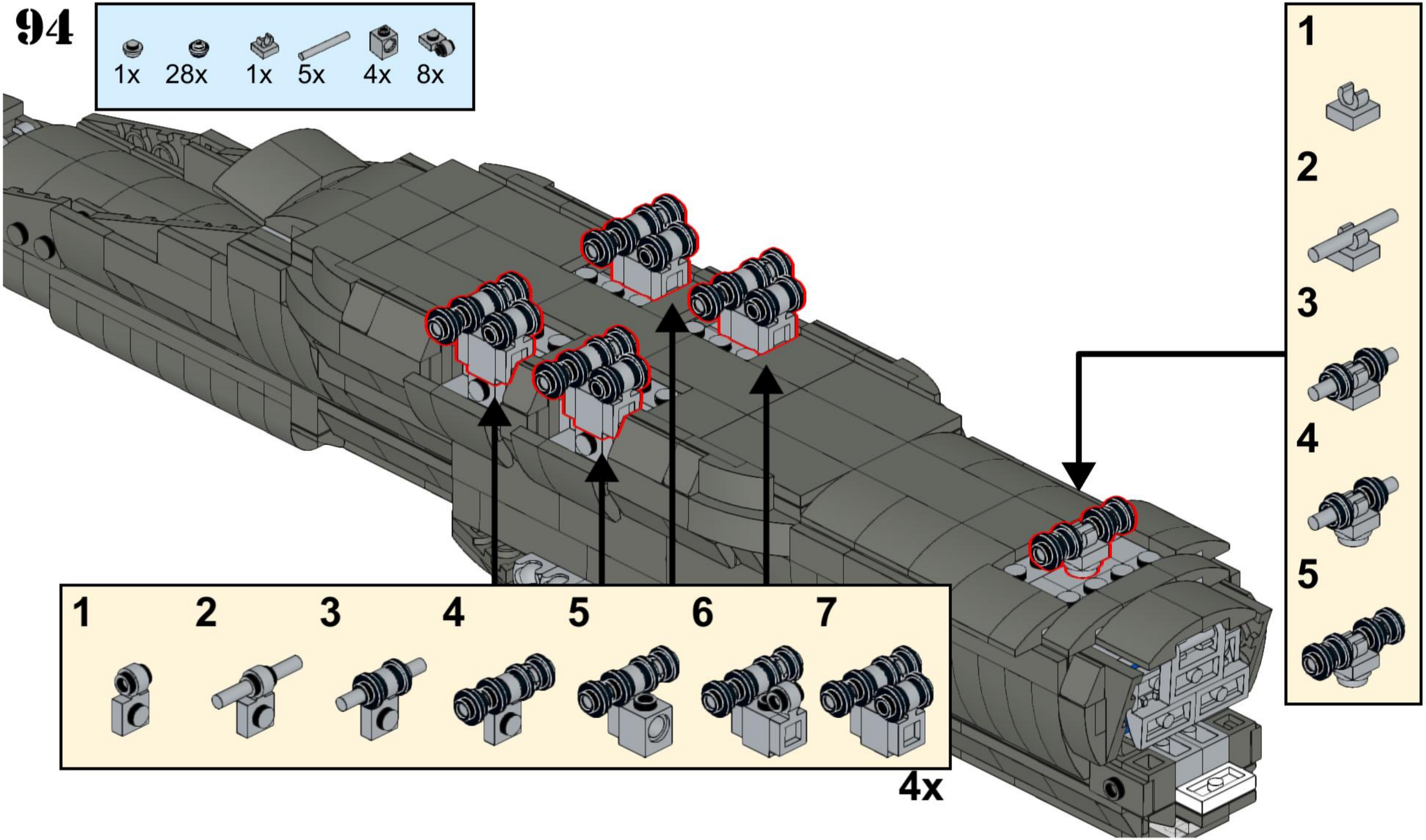
94
1x
28x
1x
5x
4x
8x
1
2
3
4
5
1
2
3
4
5
6
7
4x

Carefully remove the Cargo Bay Support block (colored bricks) from the interior of the aircraft by pushing it towards the front or rear of the aircraft.

95

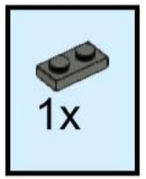

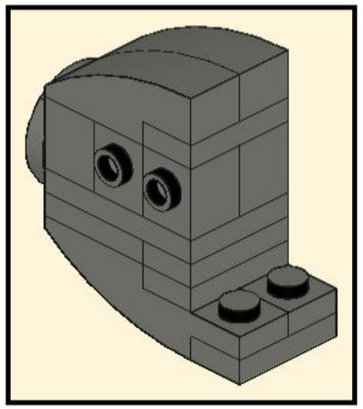

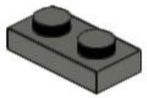

96

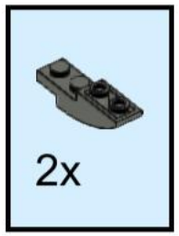

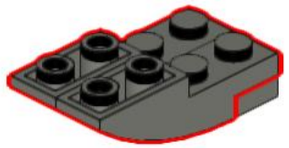

97

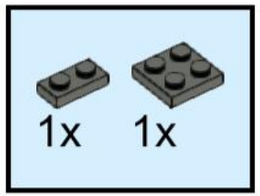

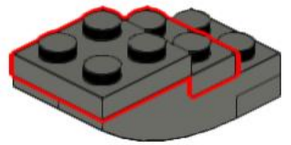

98

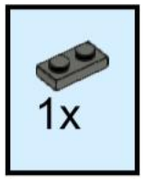

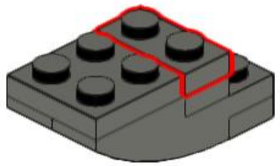

99

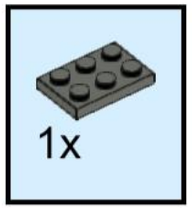

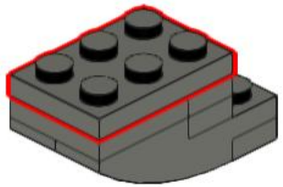

100

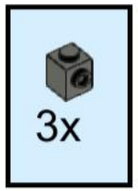

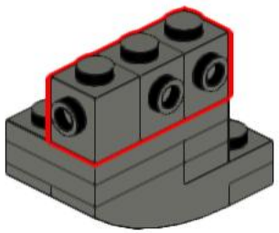

101

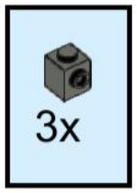

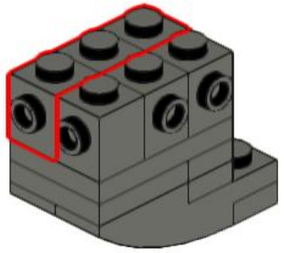

102

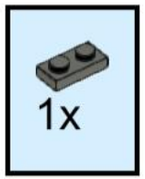

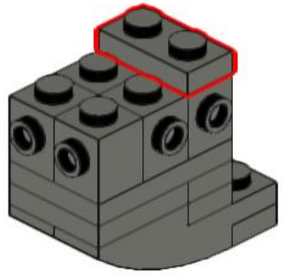

103

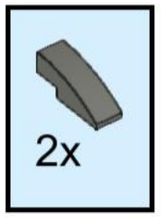

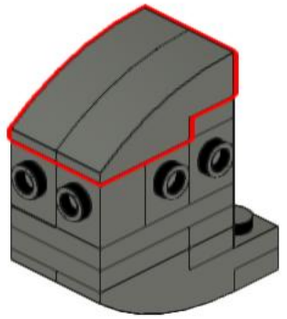

104

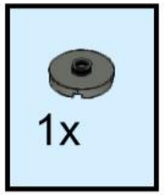

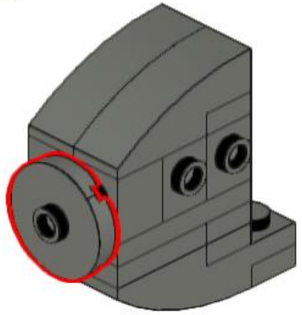

105

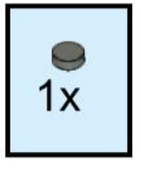

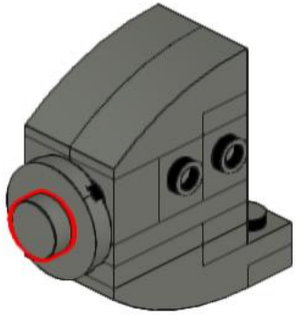

106

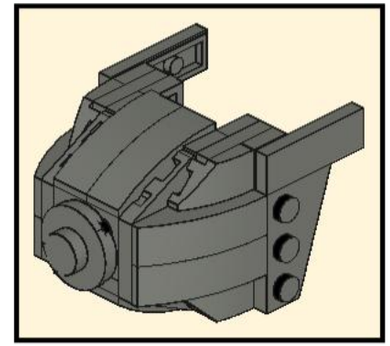

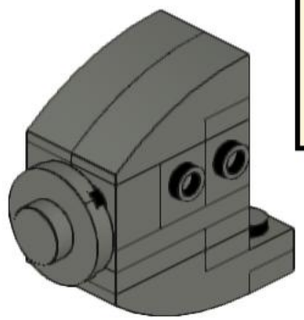

107

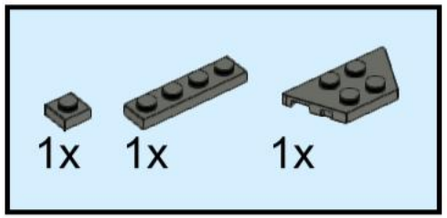

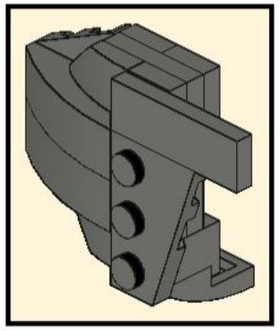

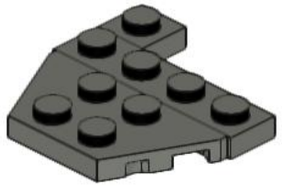

108

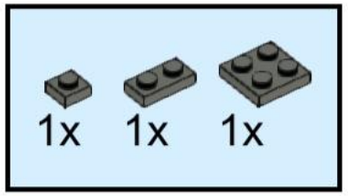

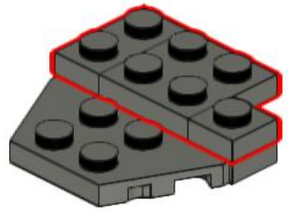

109

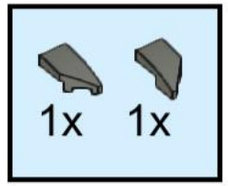

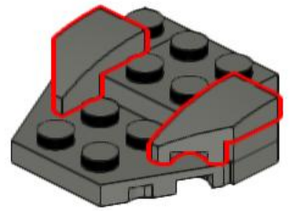

110

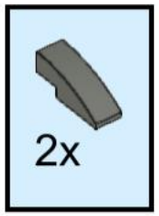

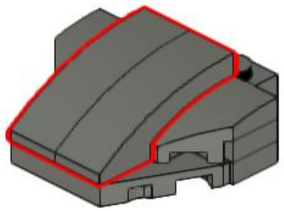

111

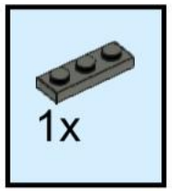

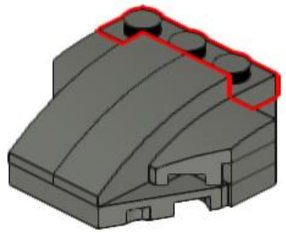

112

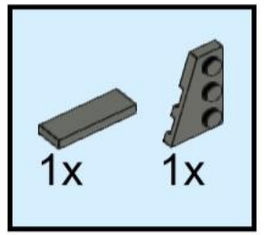

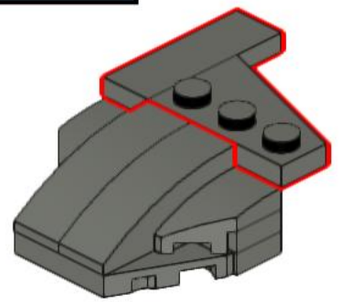

113

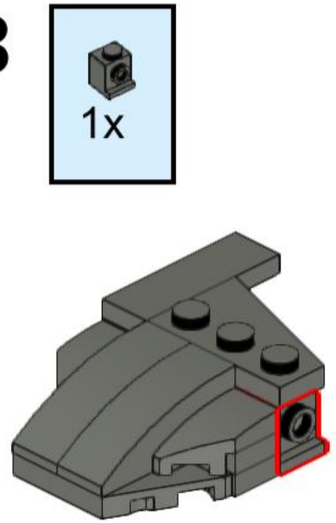

114

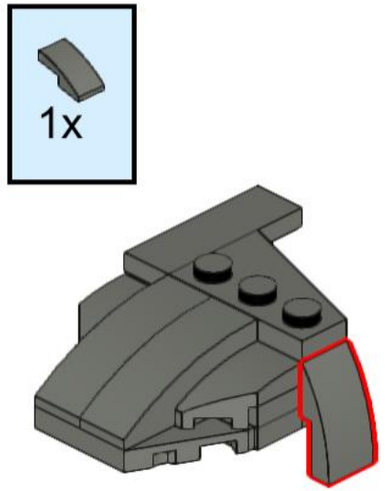

115

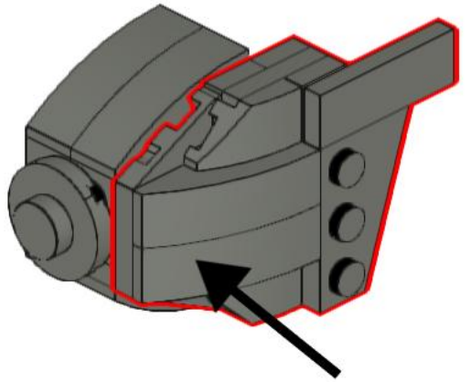

116

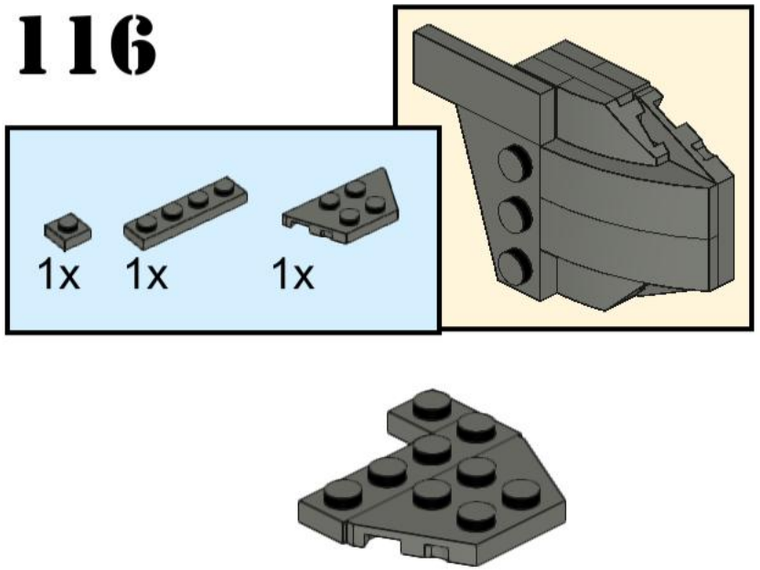

117

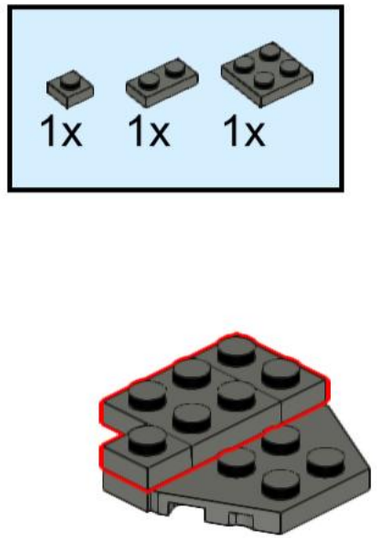

118

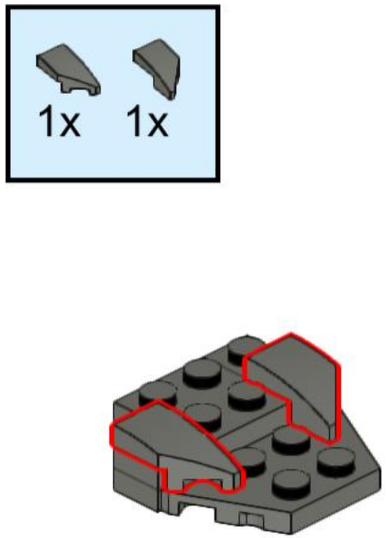

119

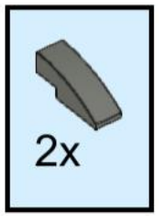

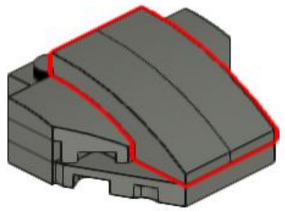

120

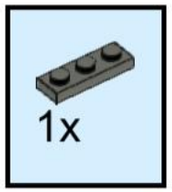

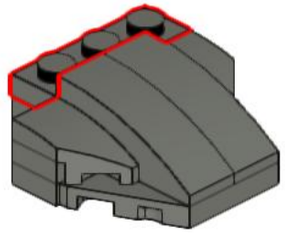

121

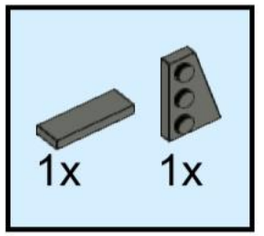

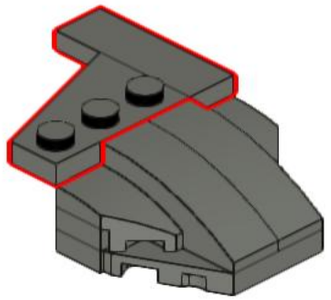

122

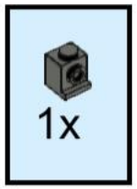

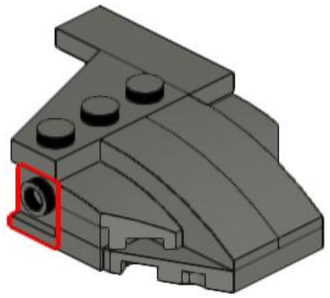

123

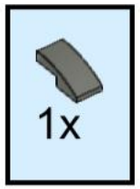

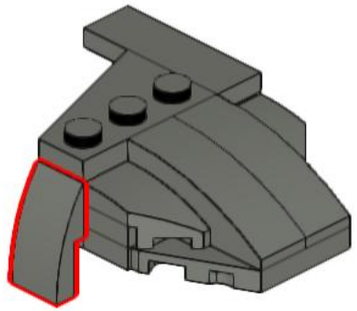

124

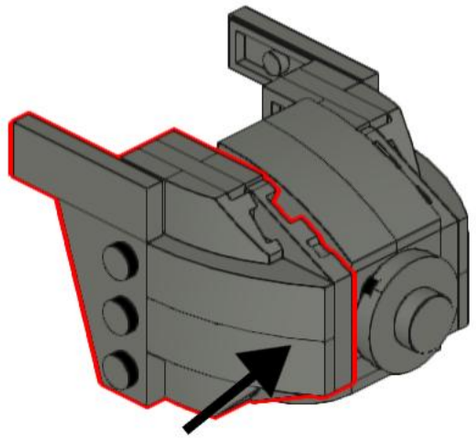

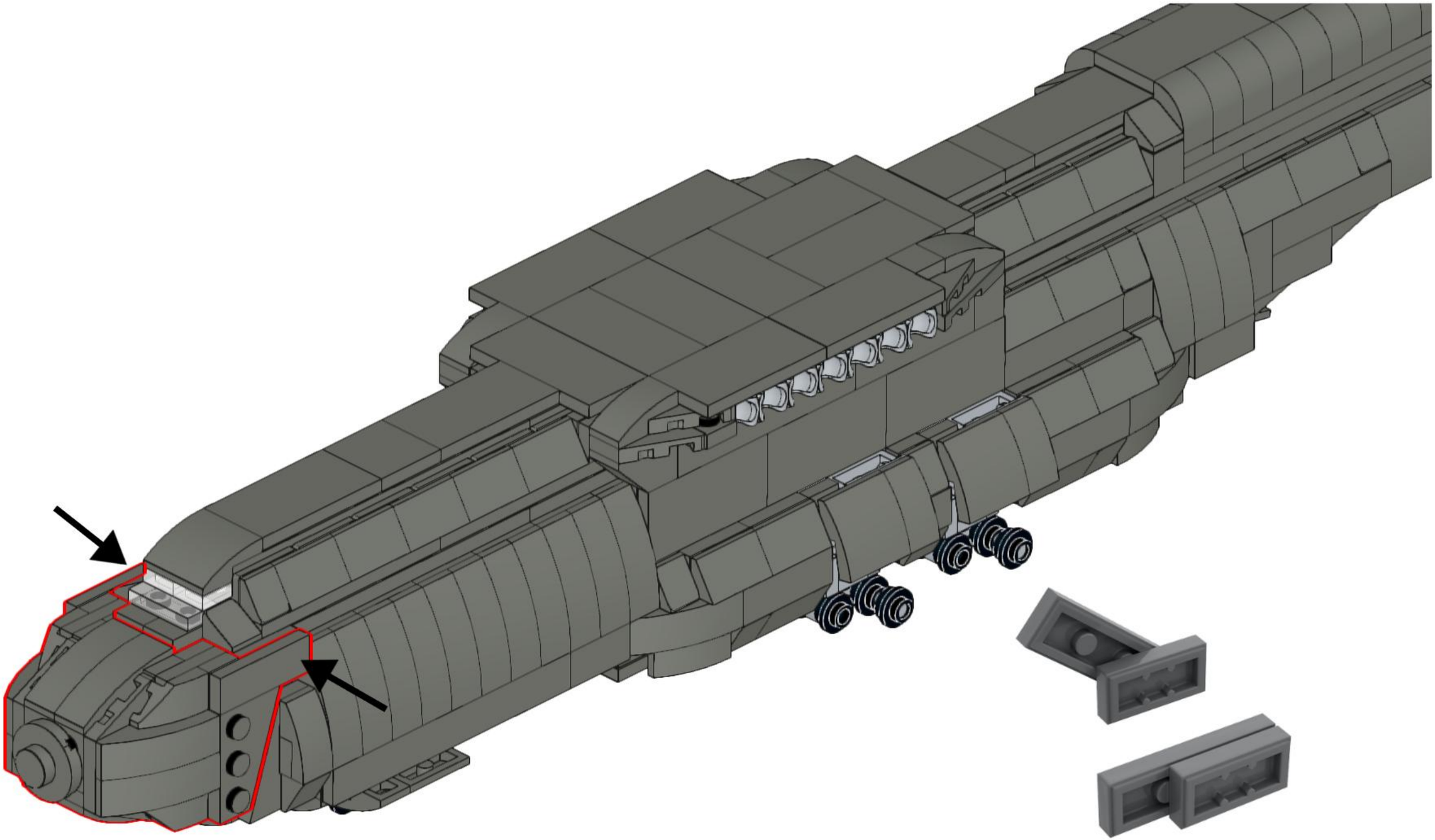

To OPEN, attach 1/3 tile using last open spot on bottom of tile
To CLOSE, attach 1x3 tile using the 1st bottom pin under the tile.

126

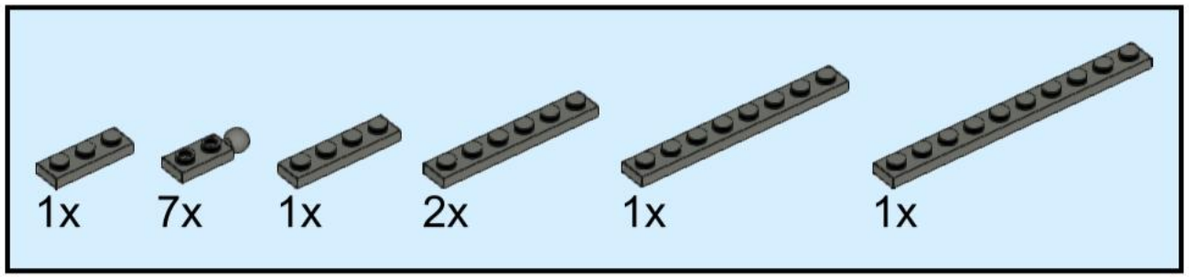

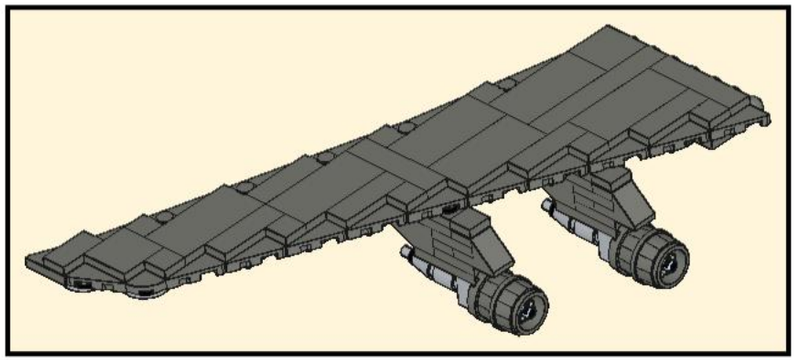

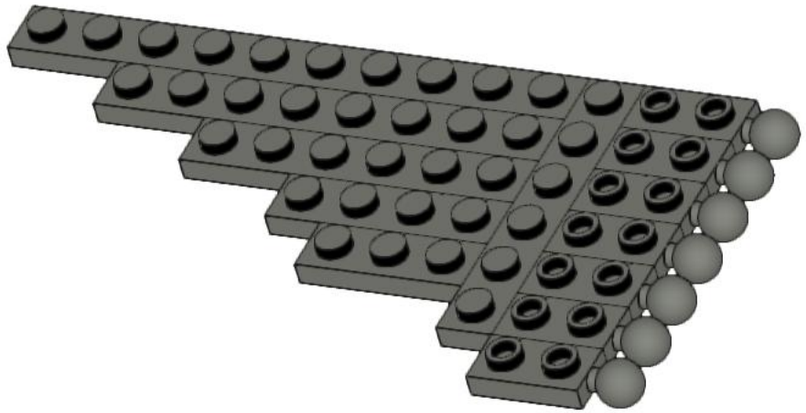

127

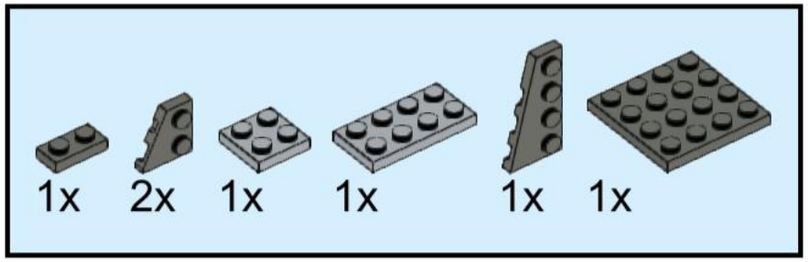

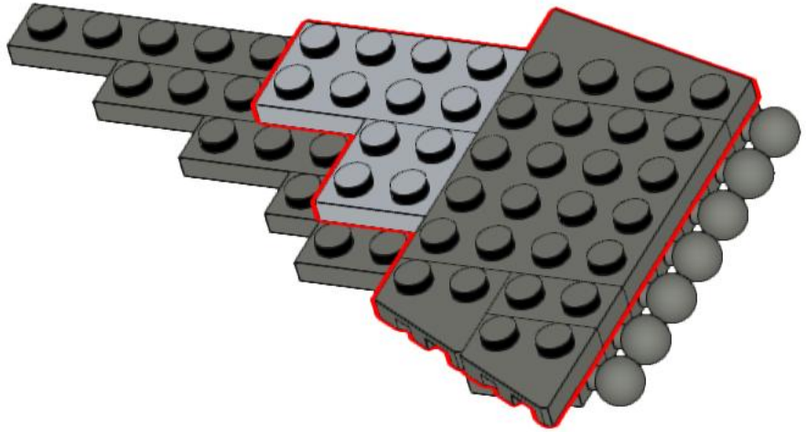

128

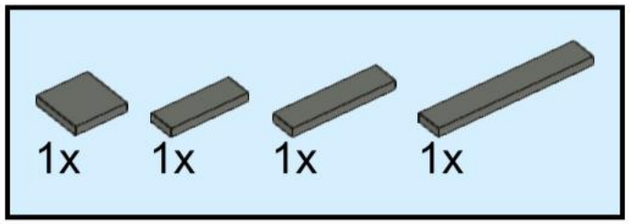

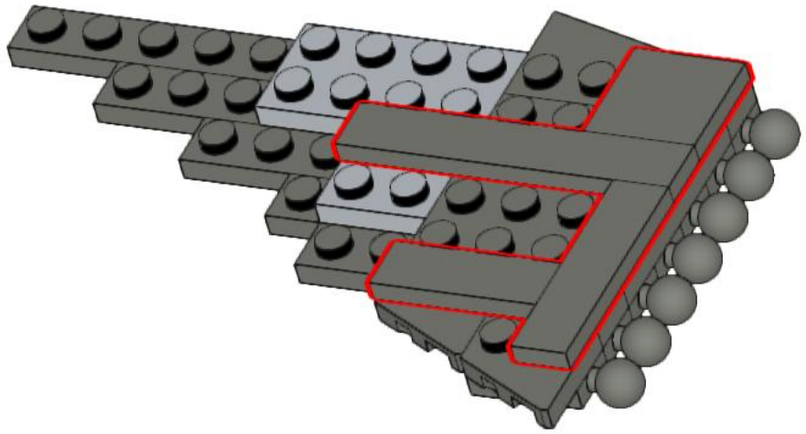

129

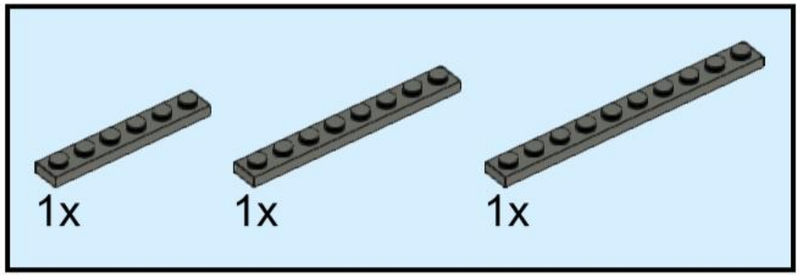

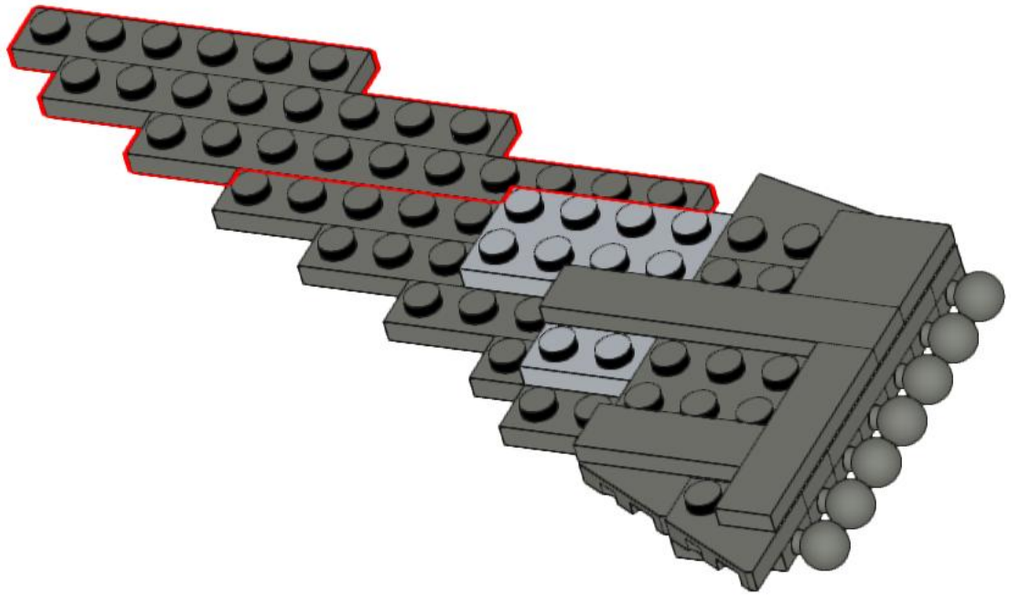

130

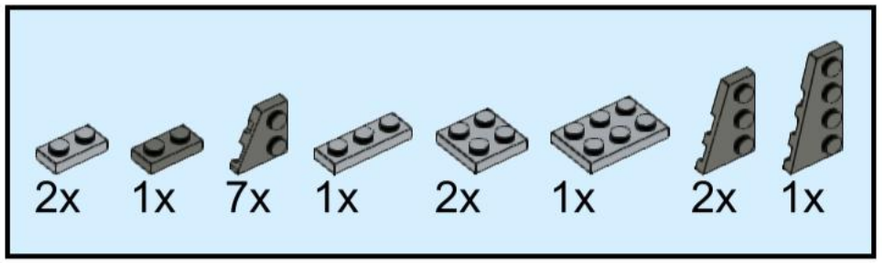

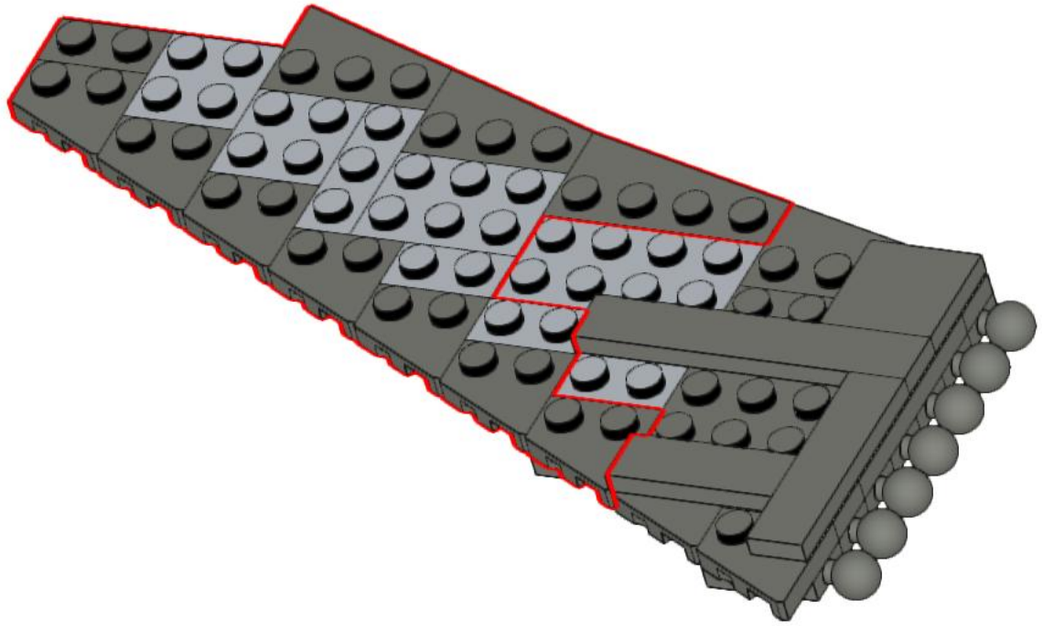

131

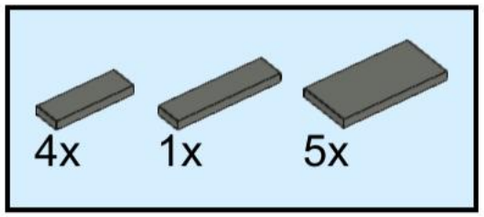

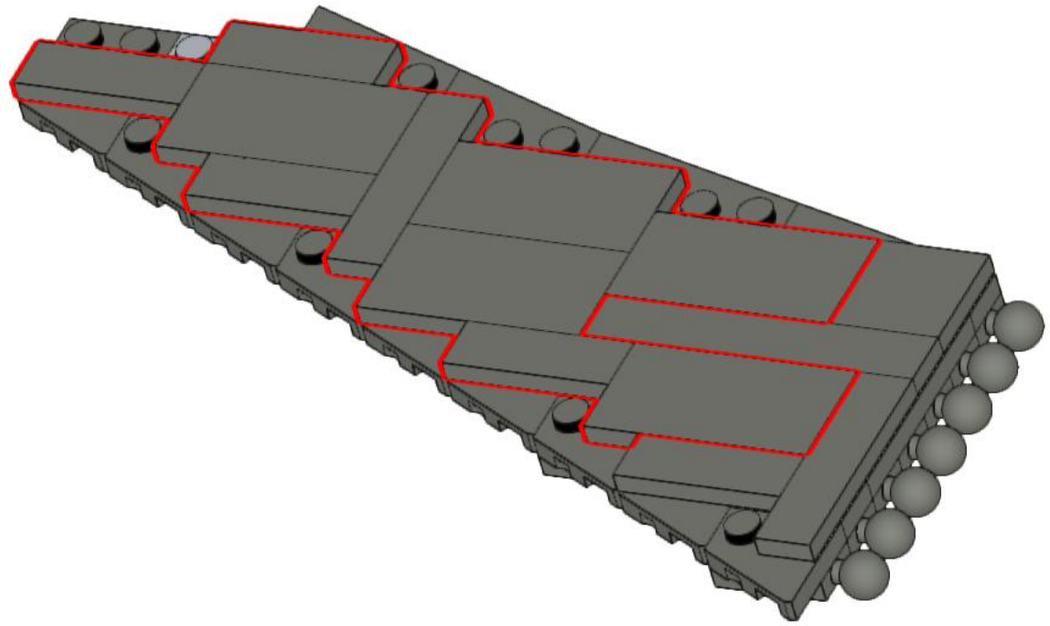

132

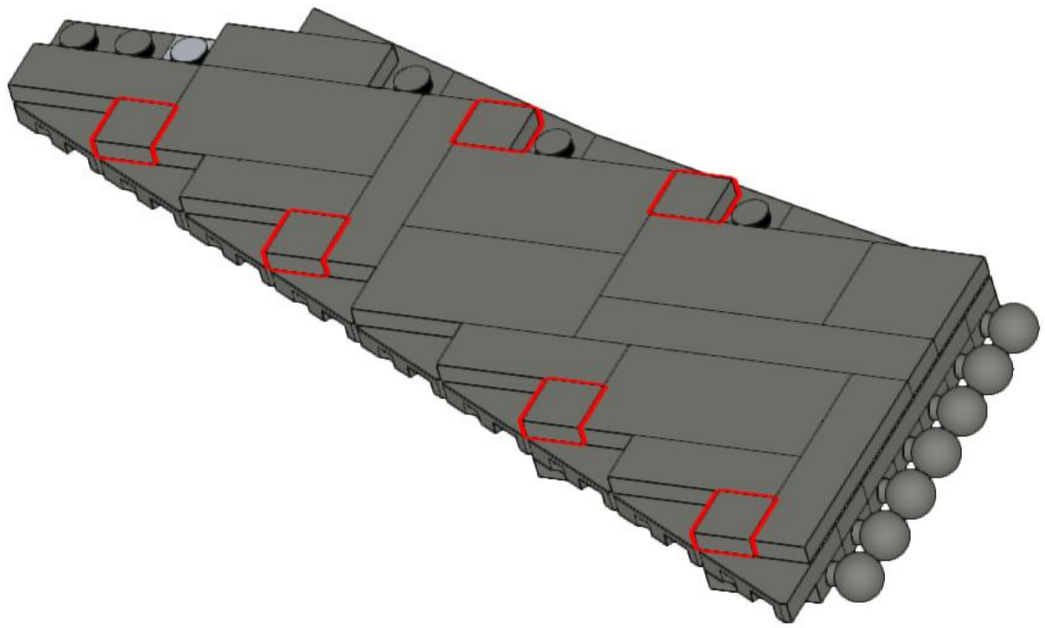

133

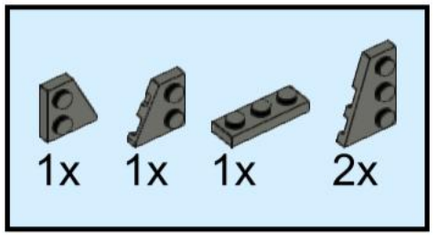

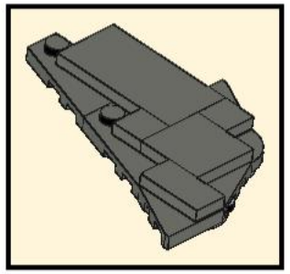

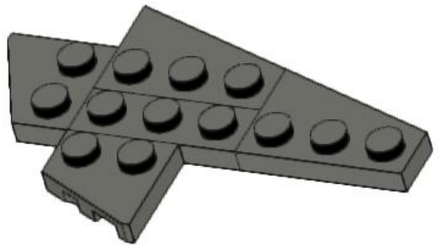

134

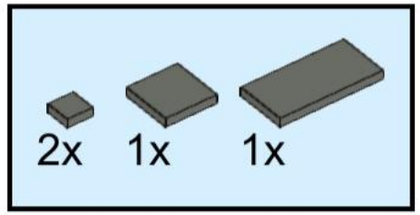

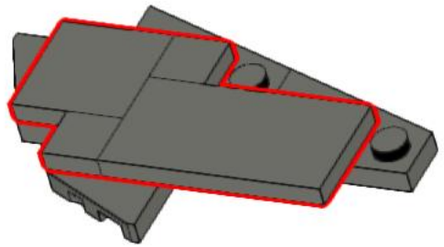

135

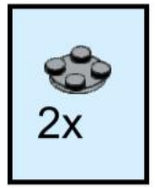

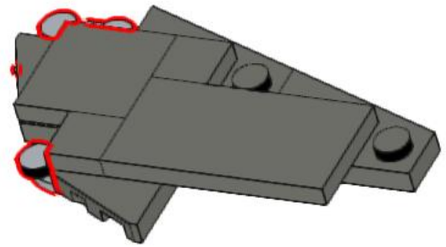

136

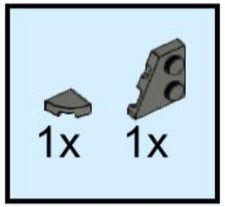

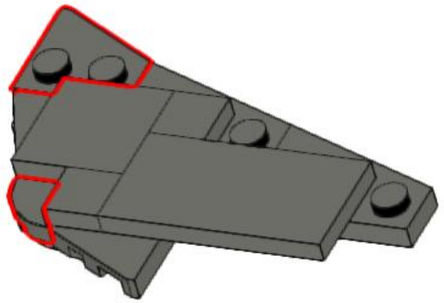

137

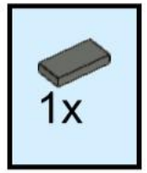

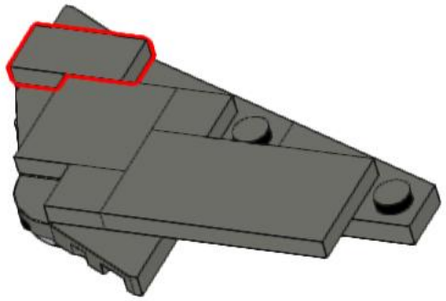

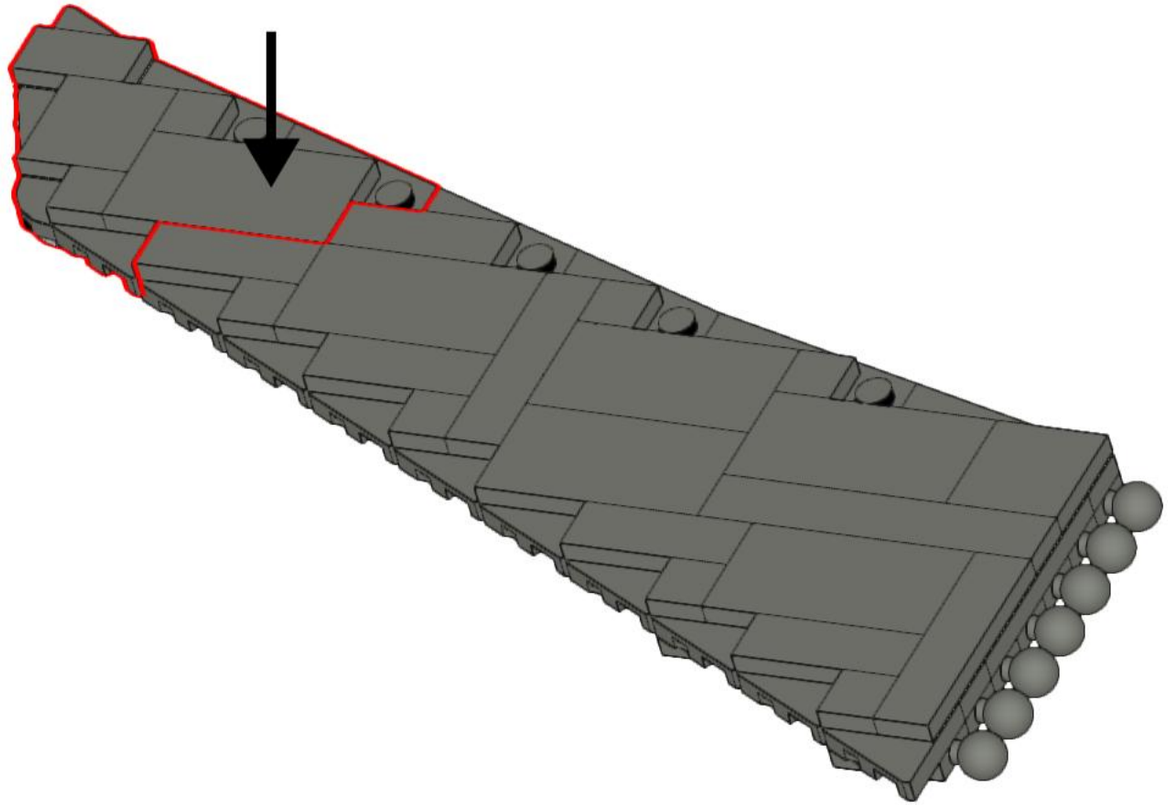

139

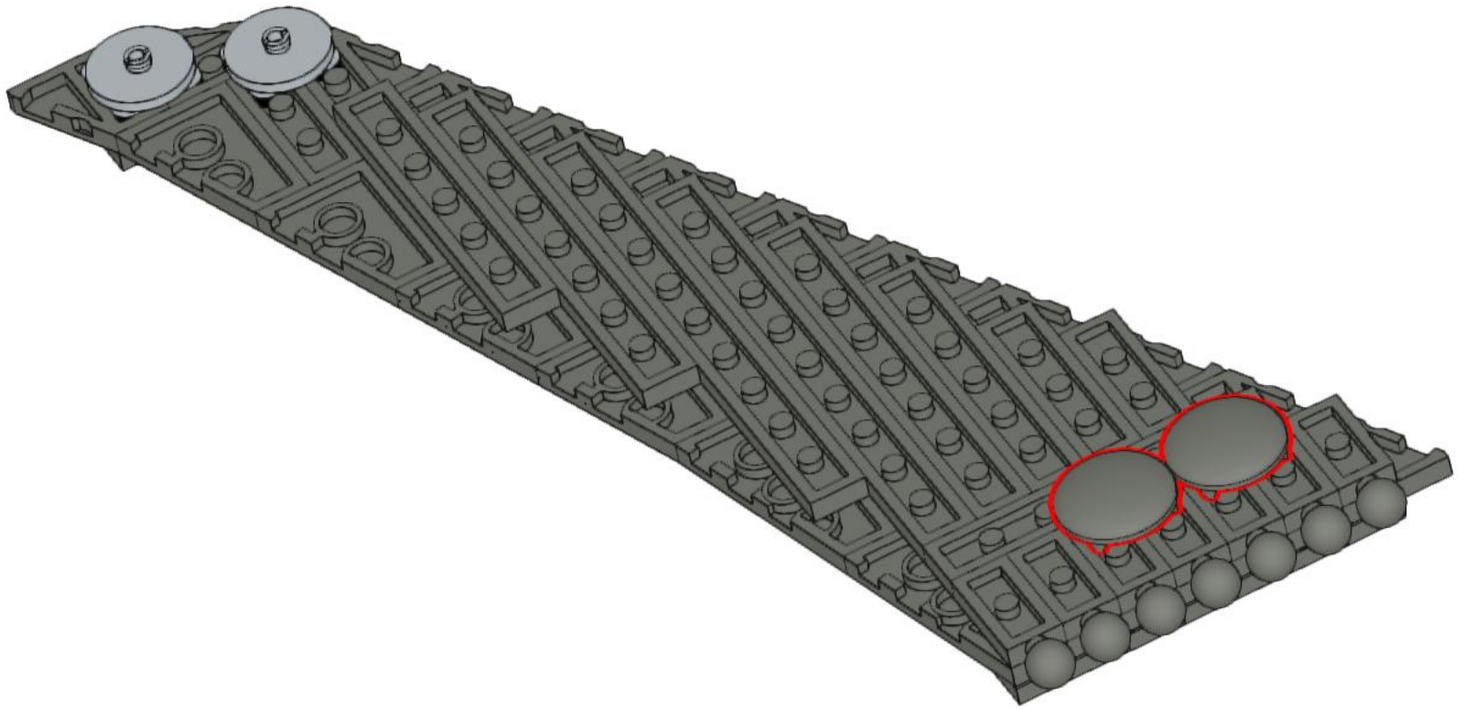

140

1x

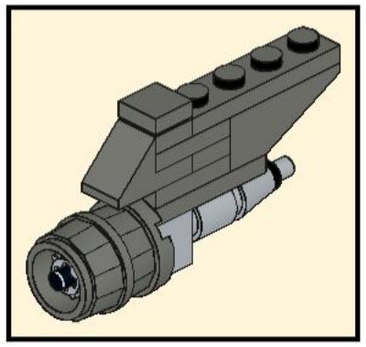

141

1x

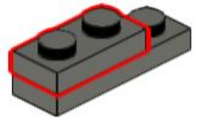

142

1x 1x

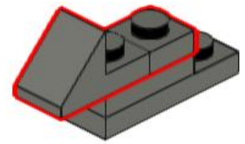

143

1x 1x

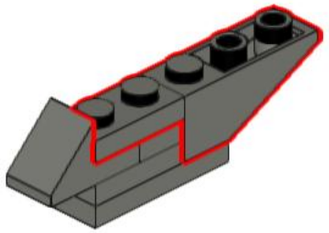

144

1x 1x

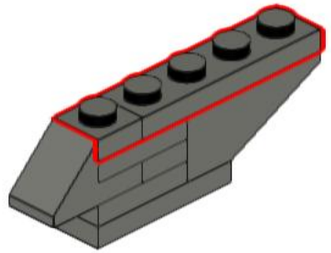

145

1x

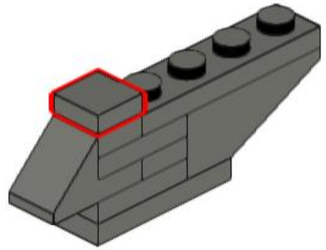

146

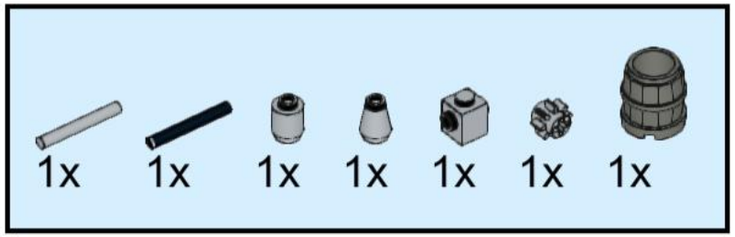

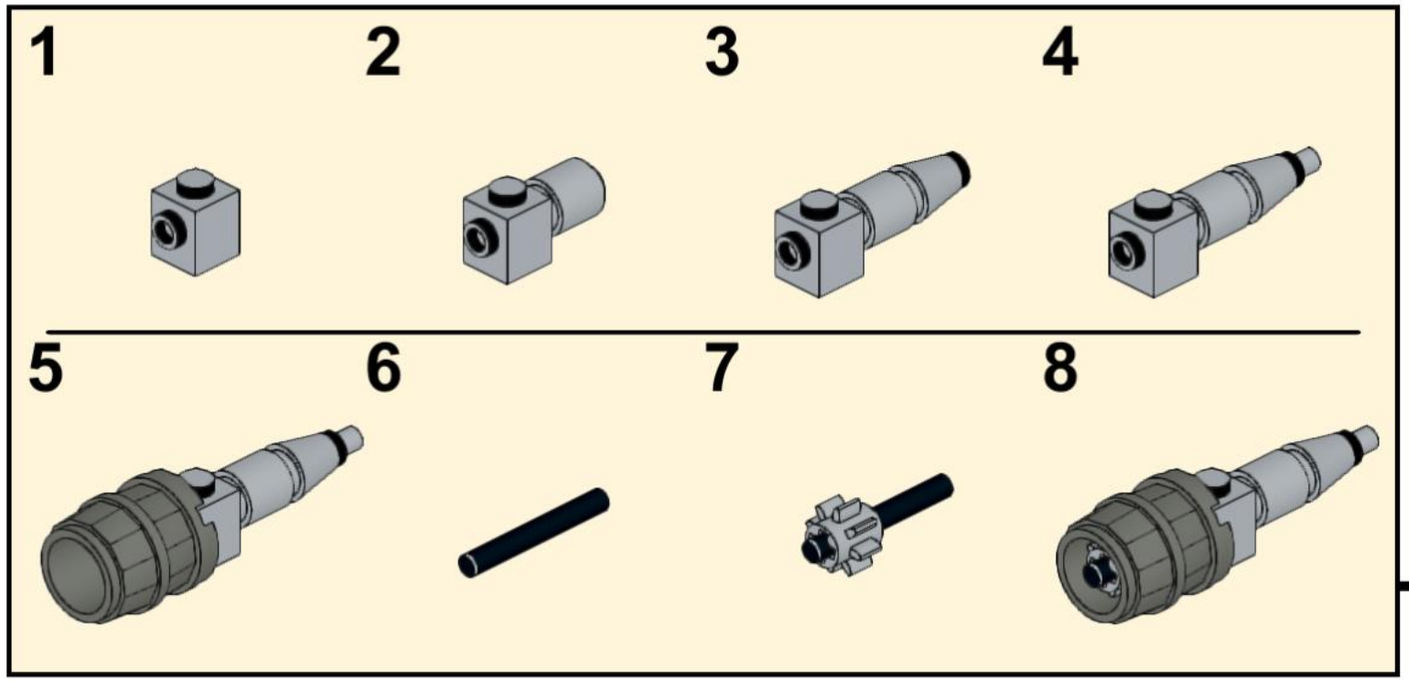

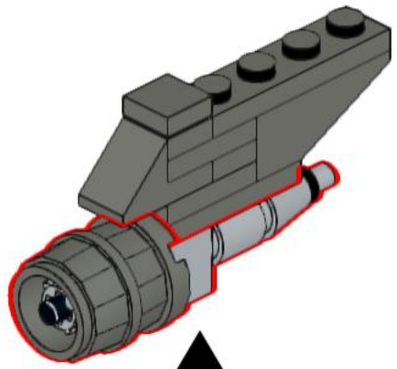

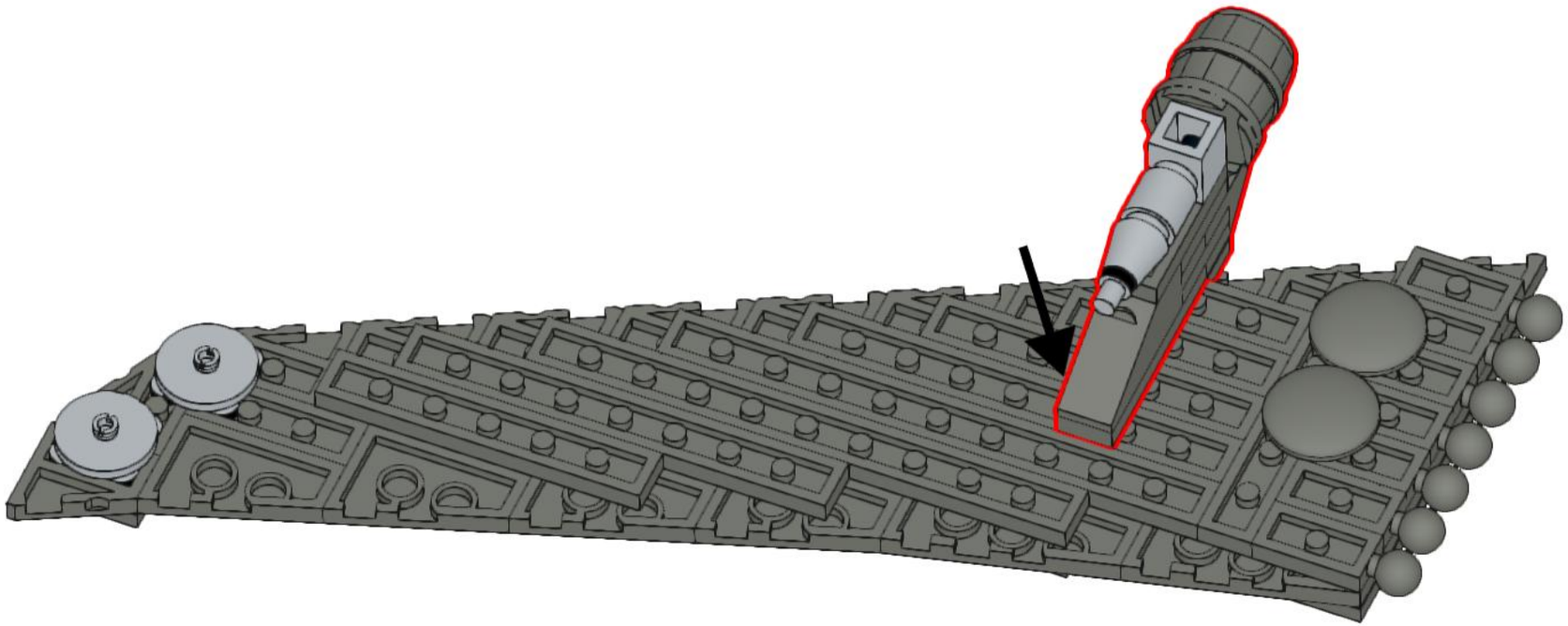

148

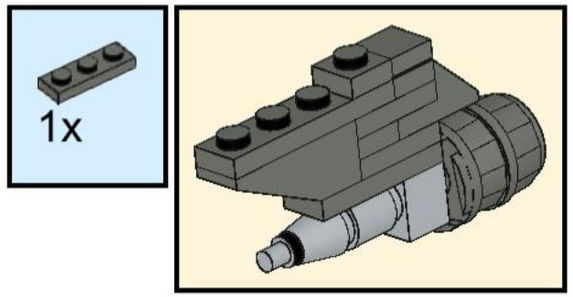

149

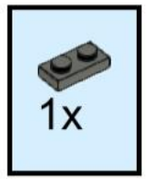

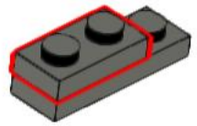

150

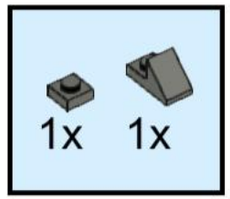

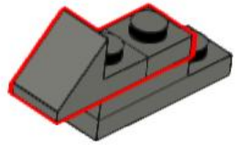

151

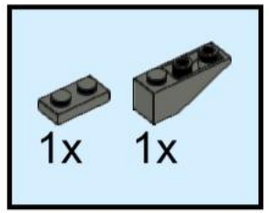

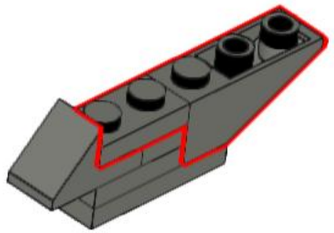

152

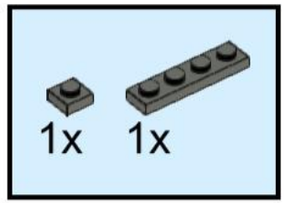

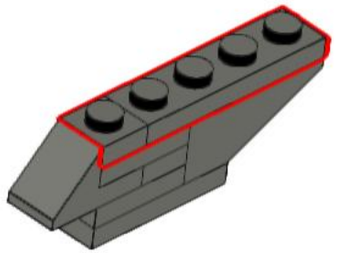

153

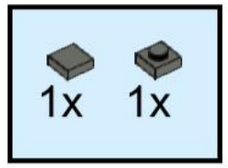

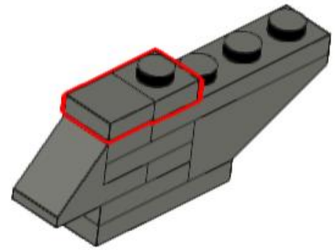

154

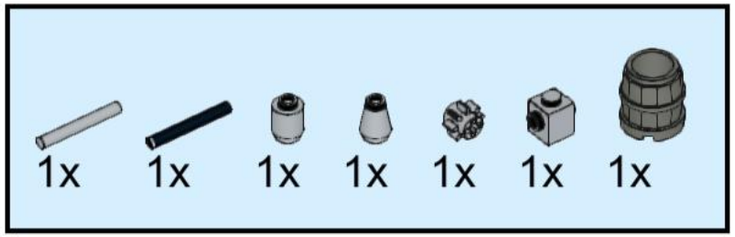

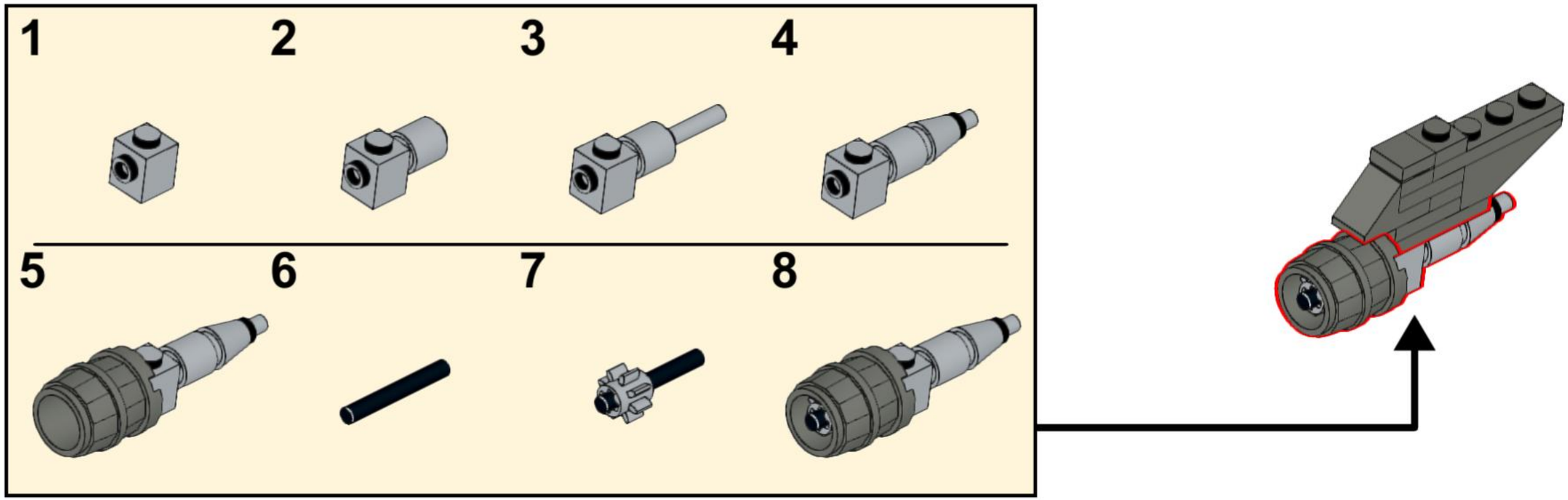

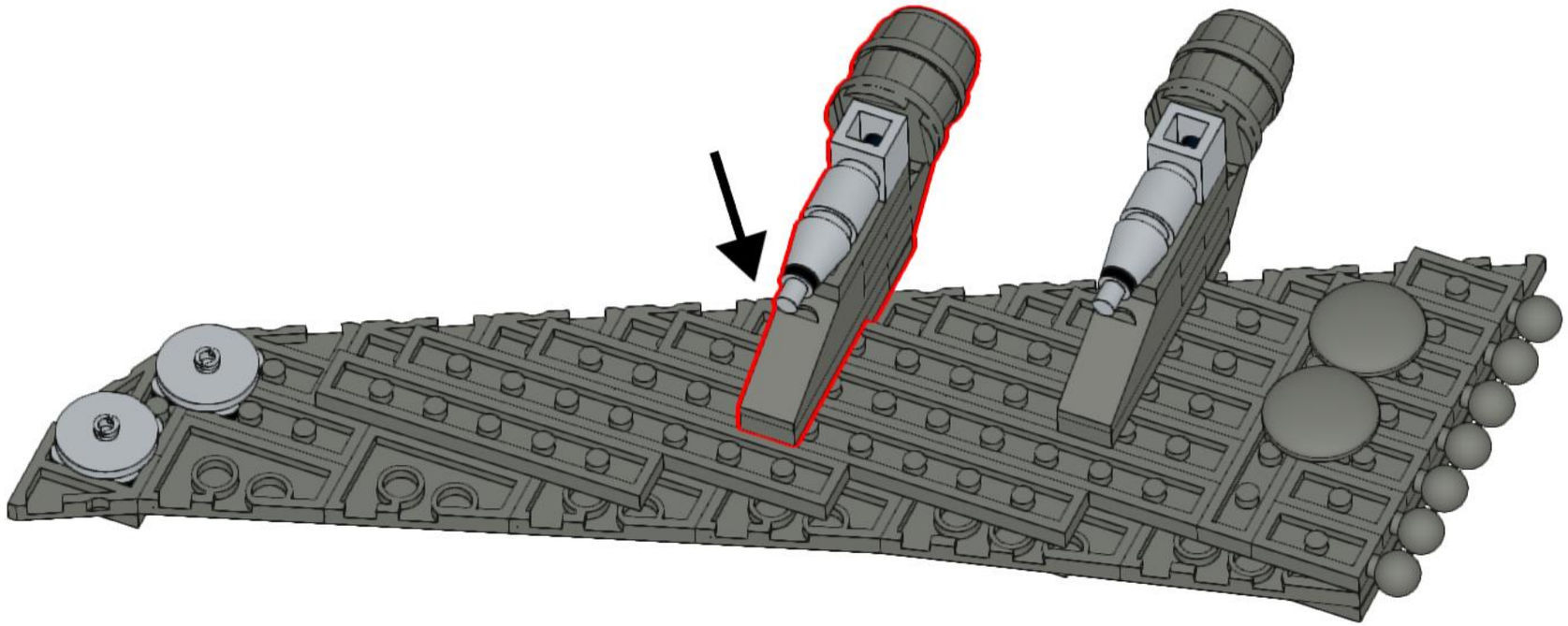

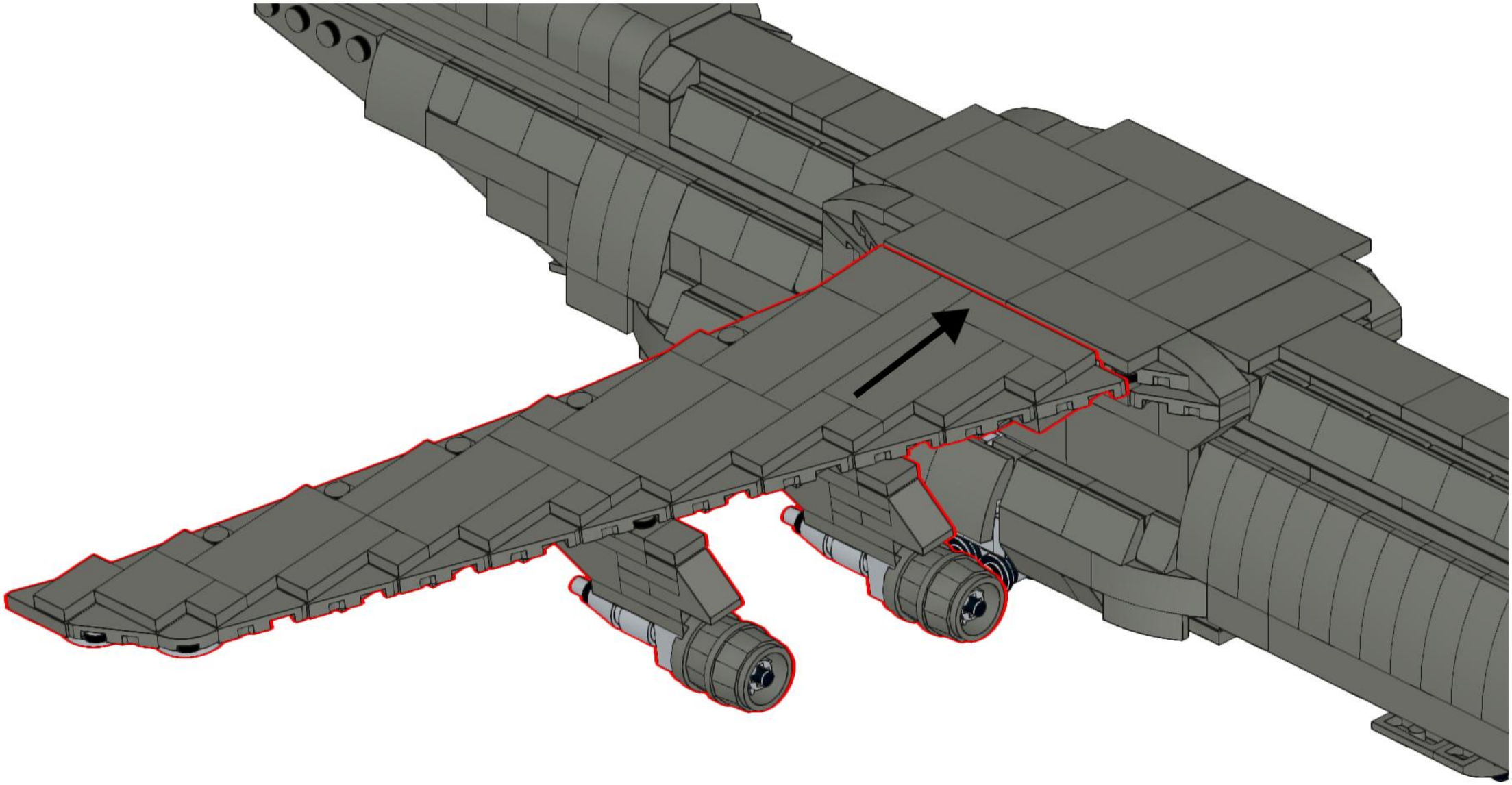

157

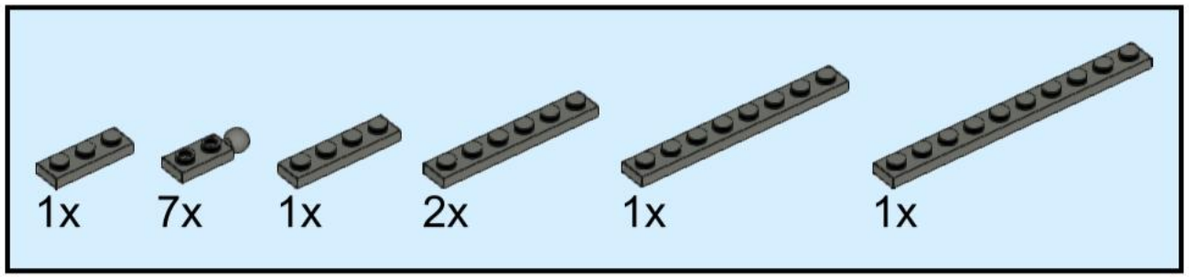

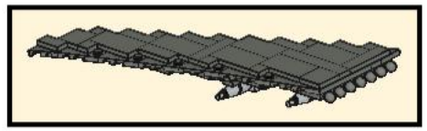

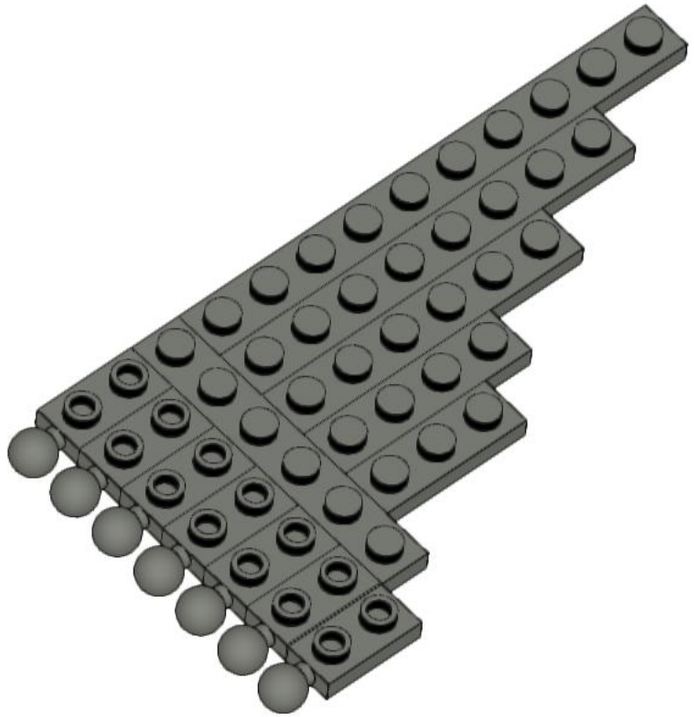

158

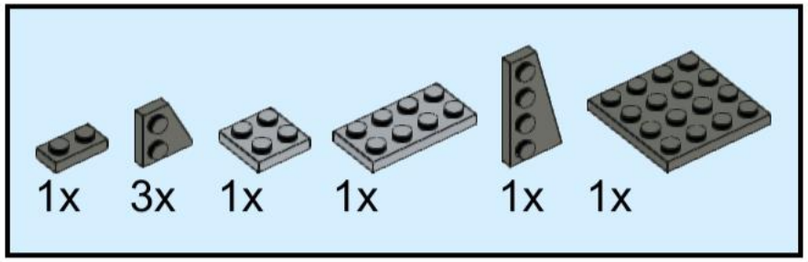

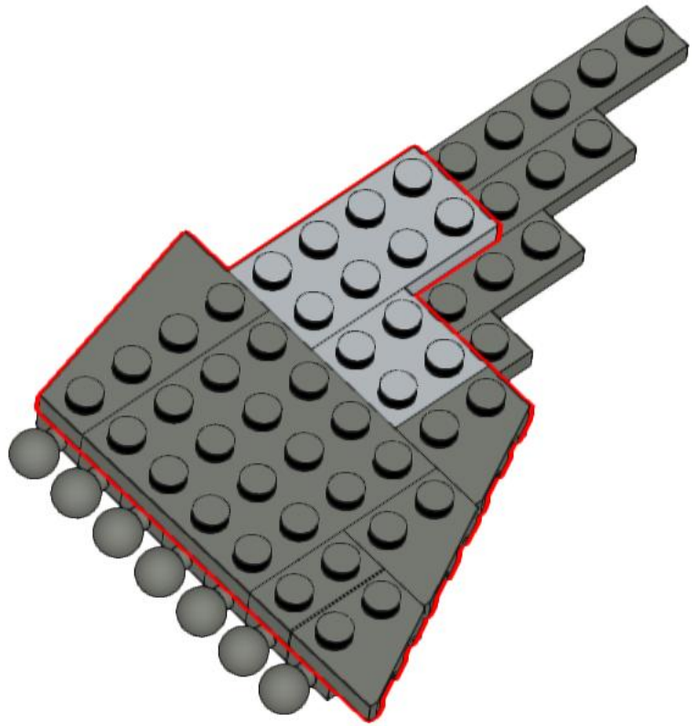

159

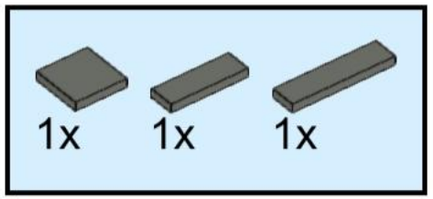

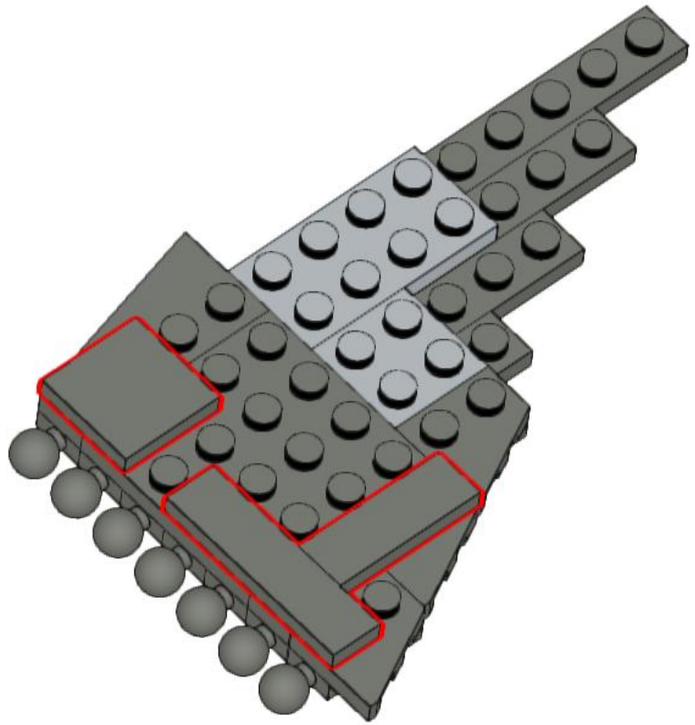

160

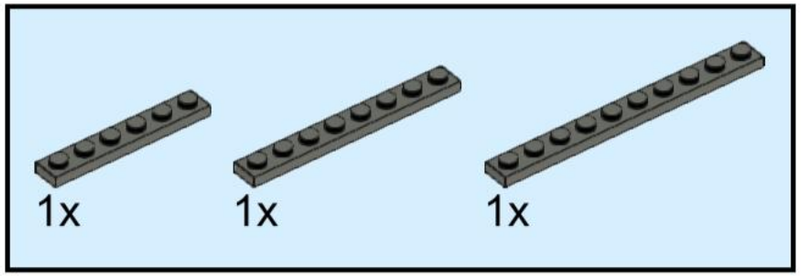

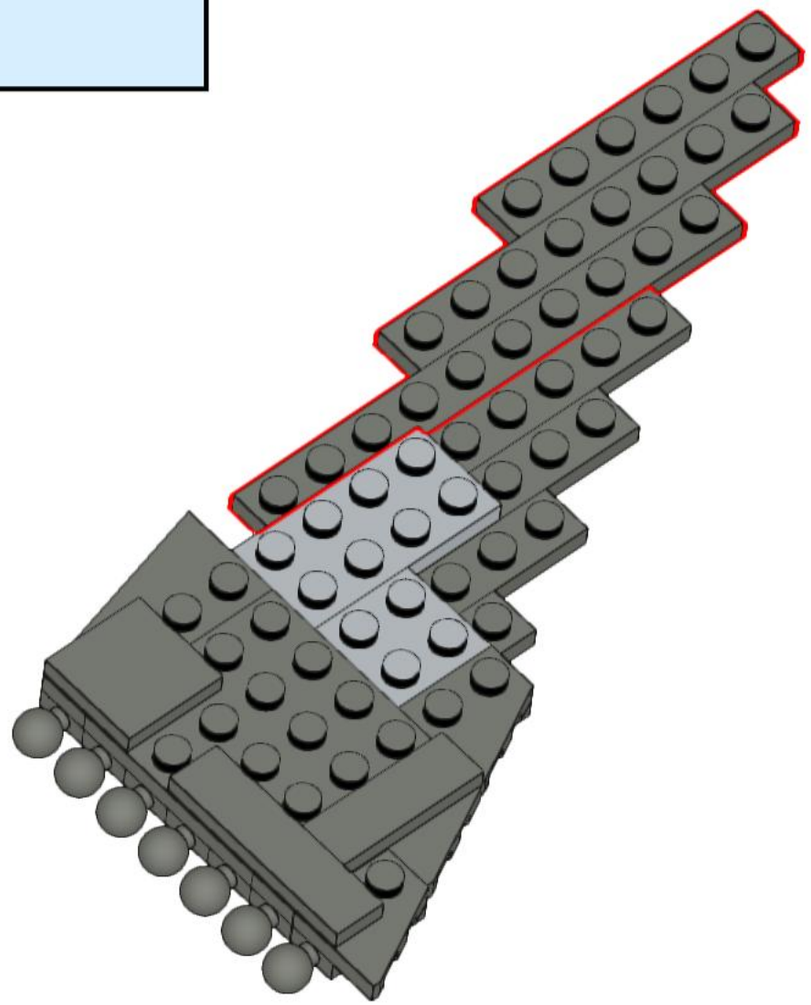

161

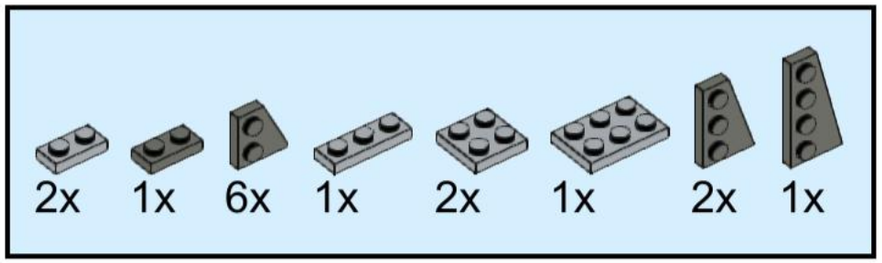

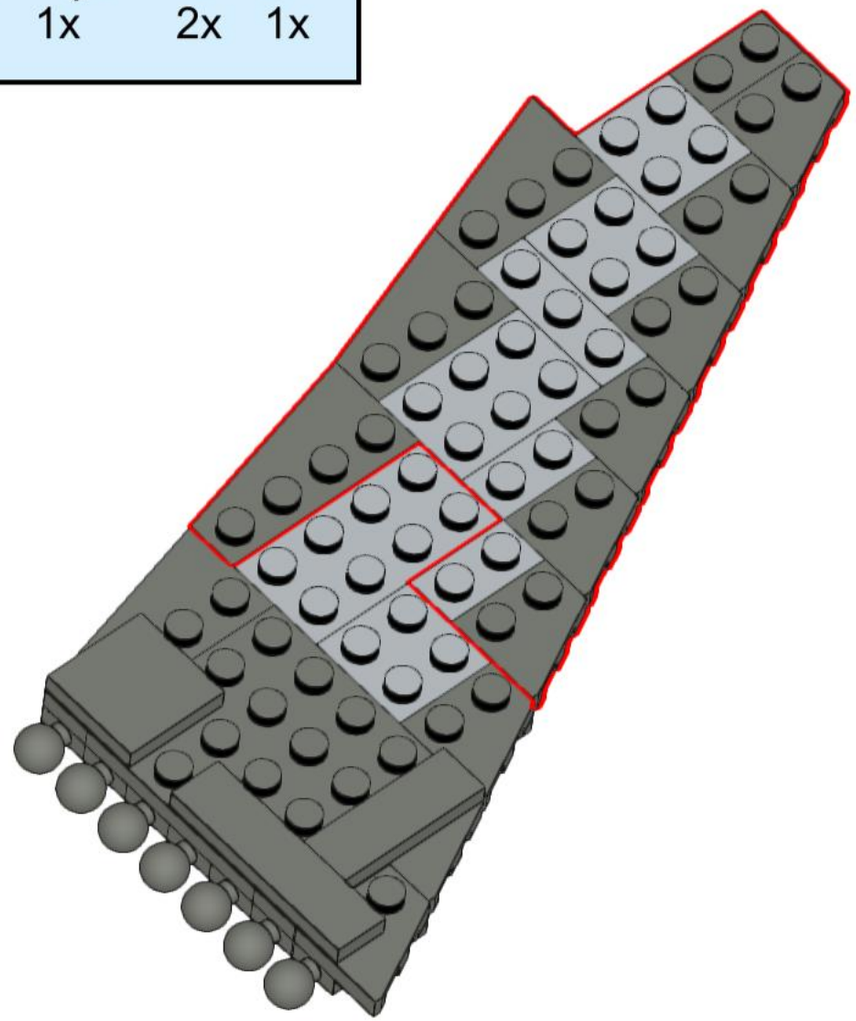

162

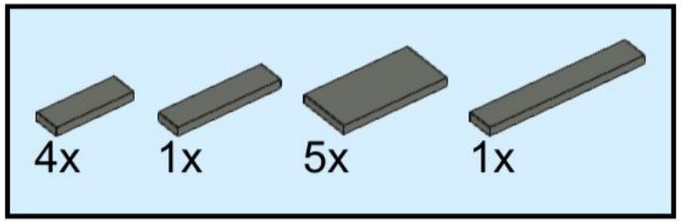

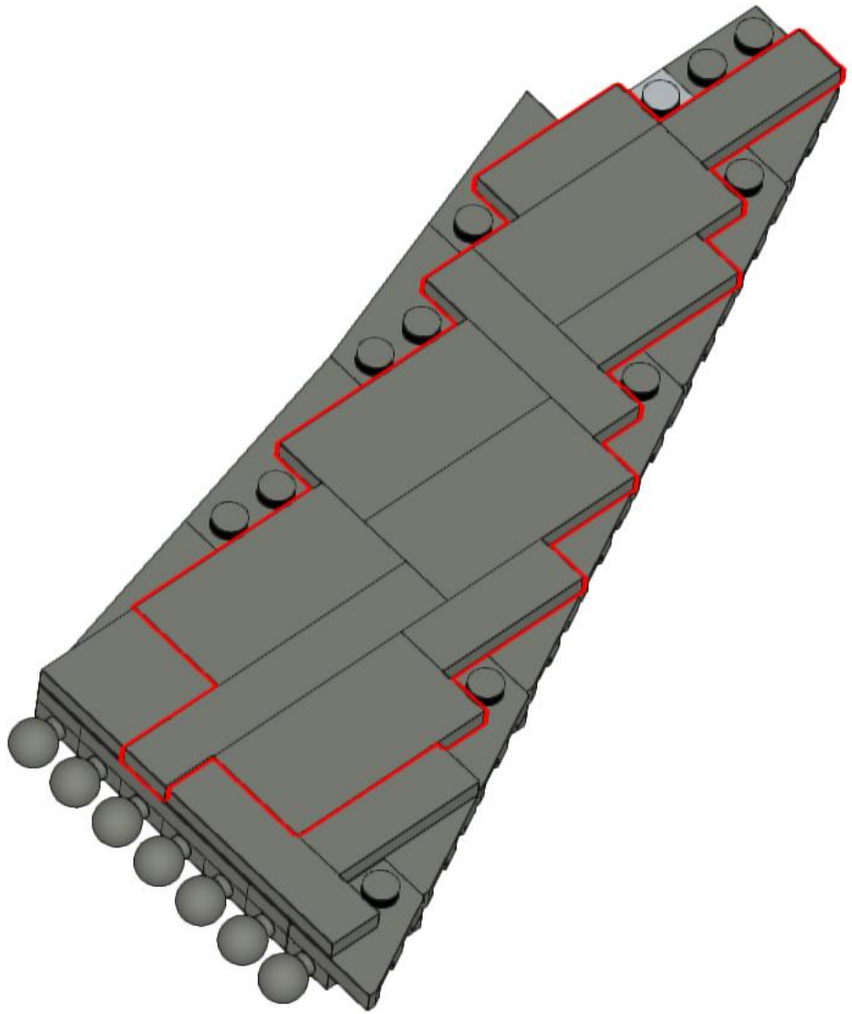

163

6x

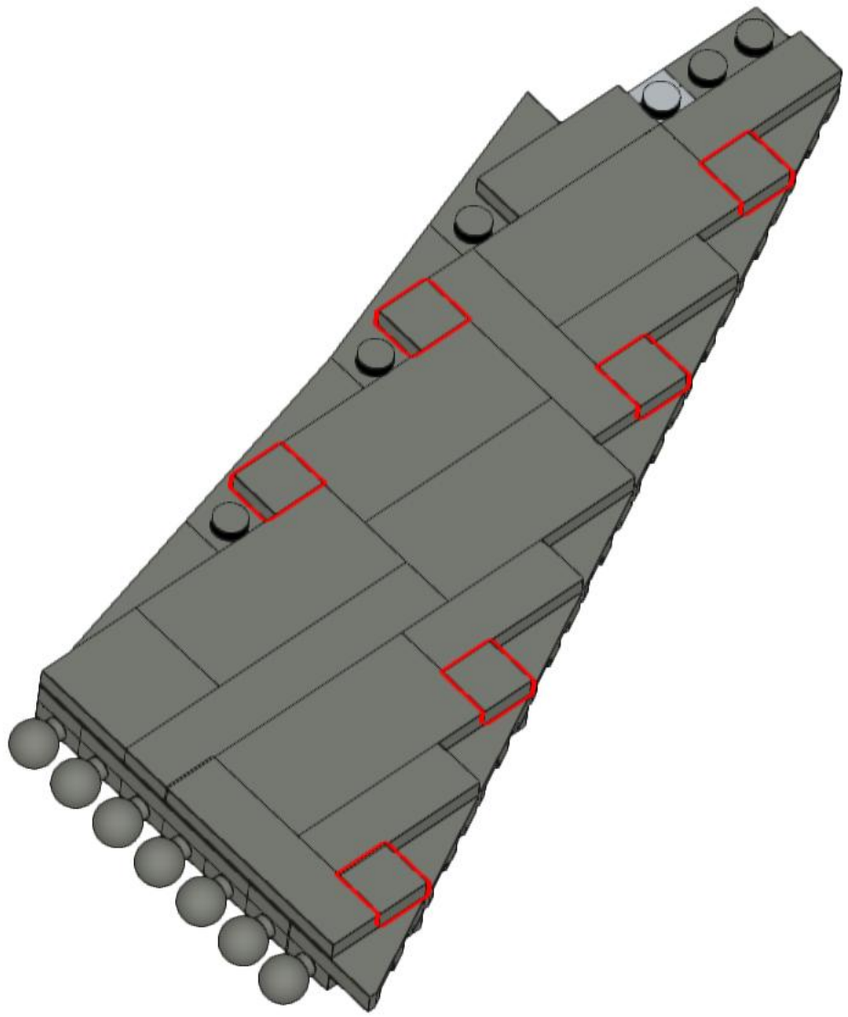

164

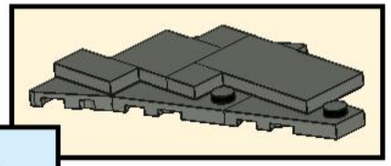

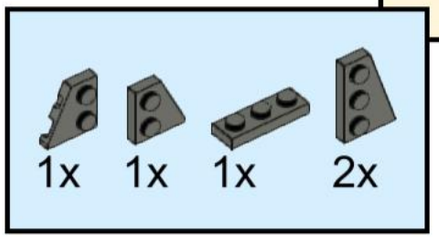

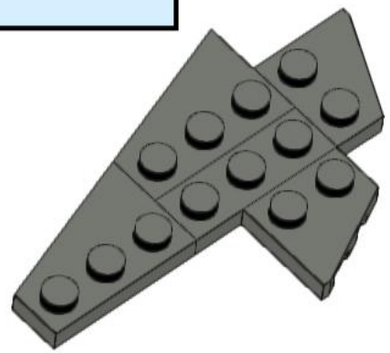

165

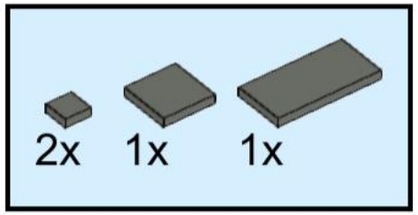

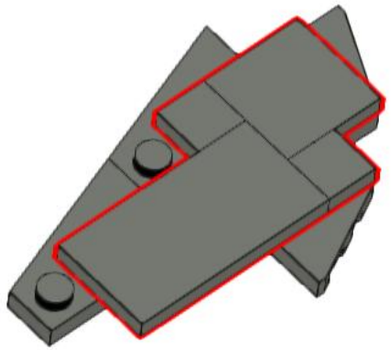

166

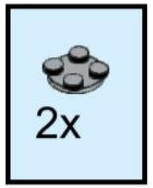

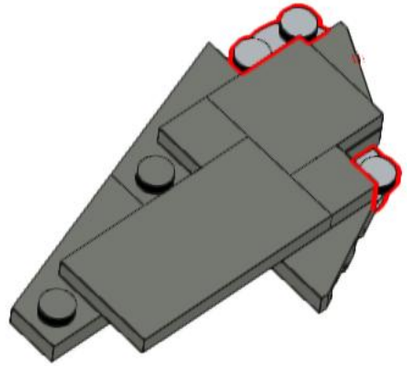

167

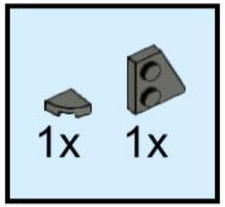

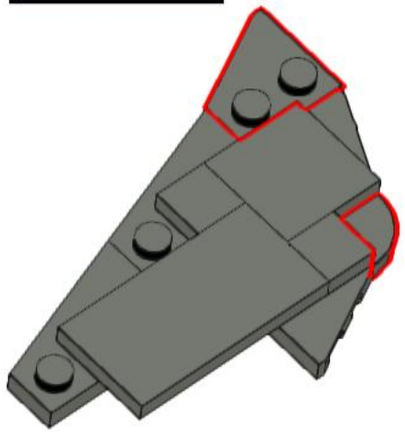

168

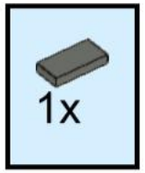

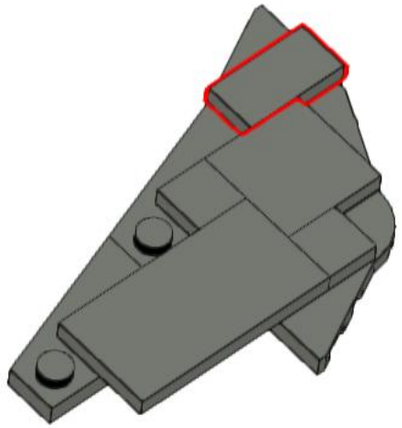

169

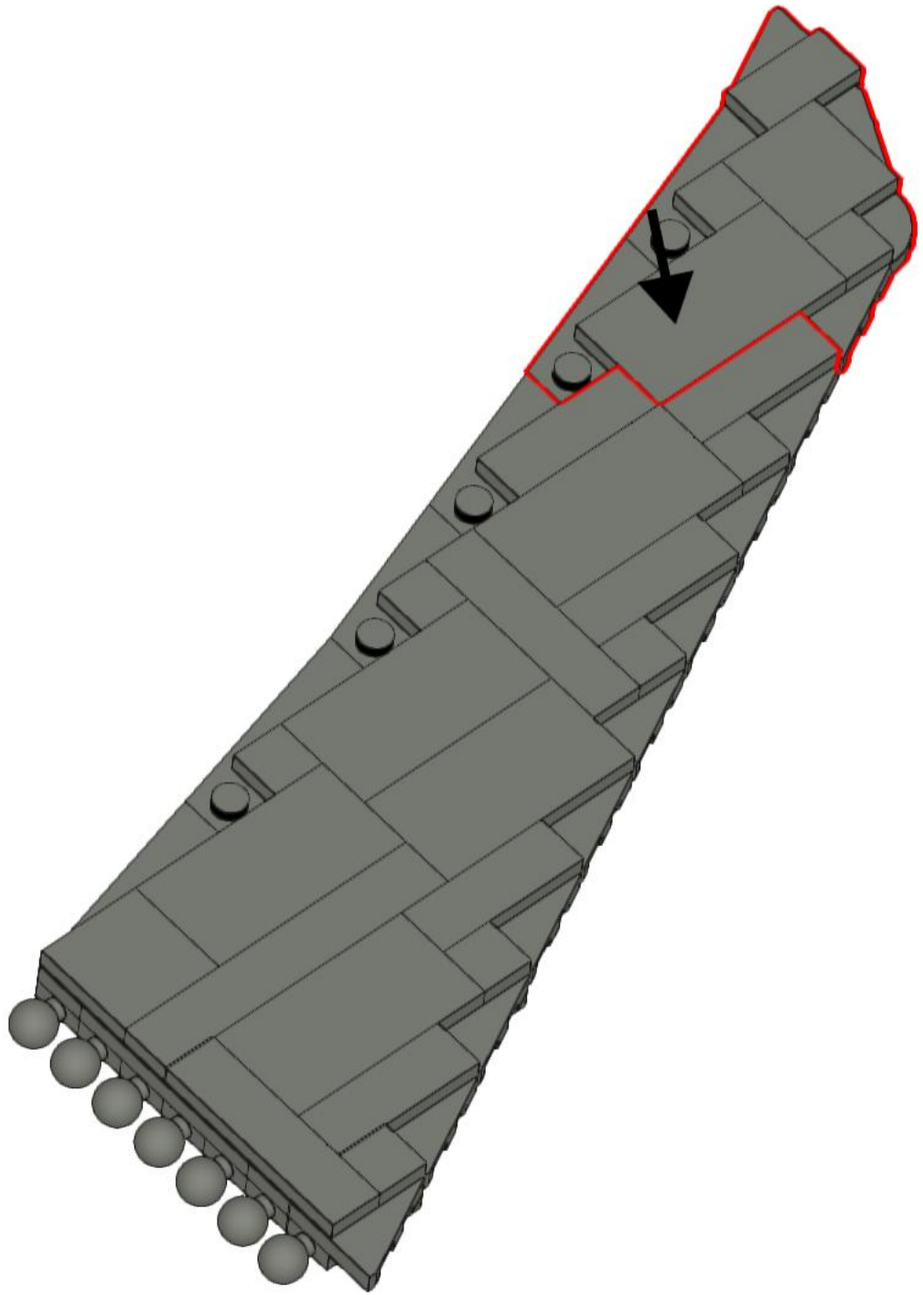

170

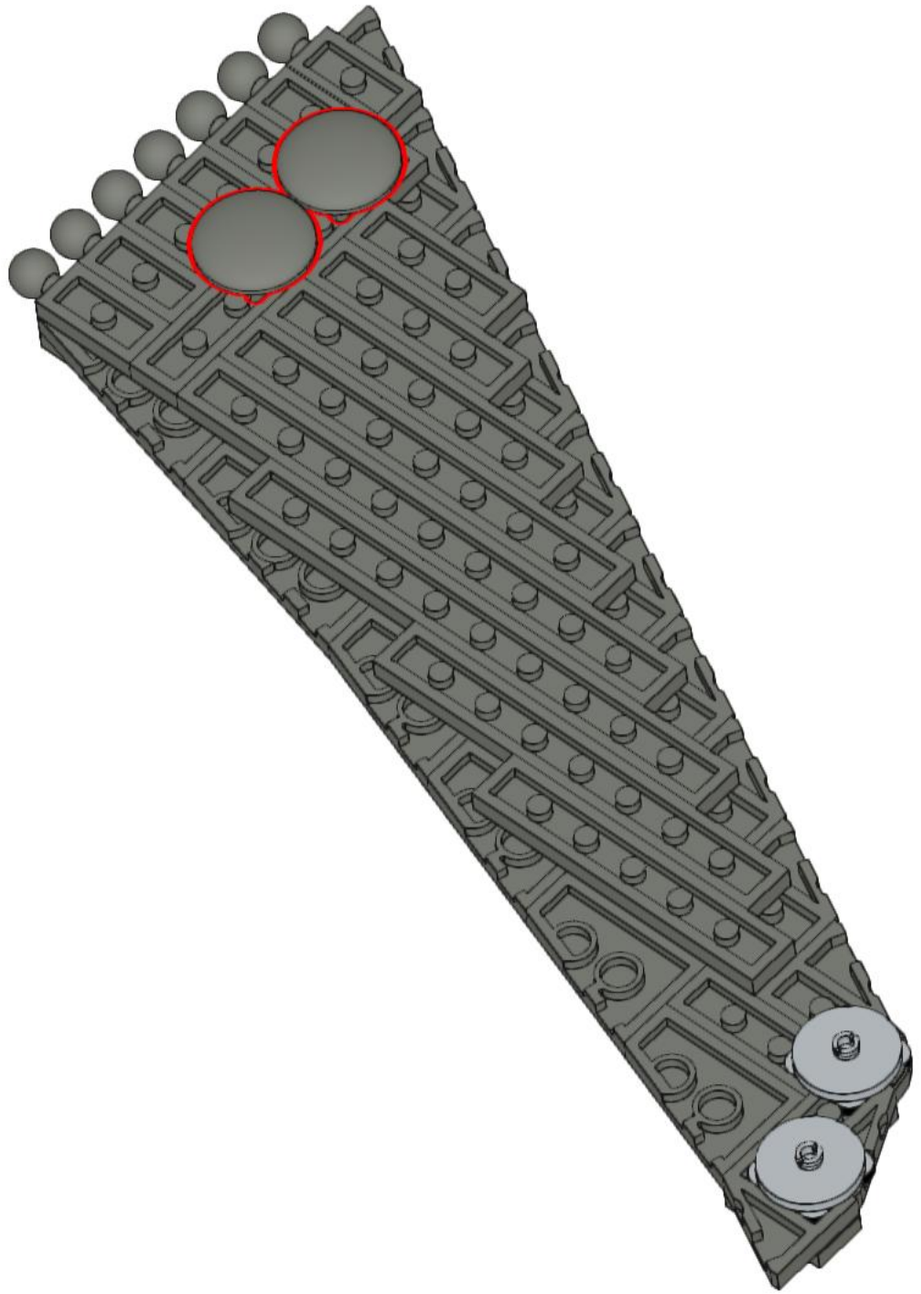

171

1x

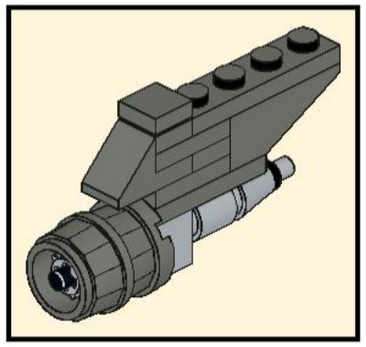

172

1x

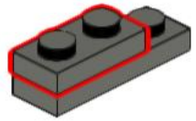

173

1x 1x

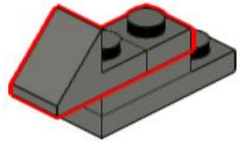

174

1x 1x

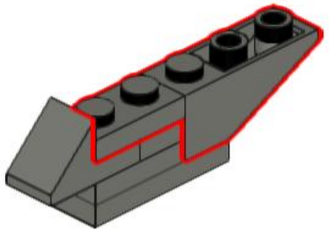

175

1x 1x

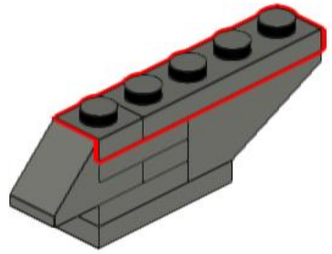

176

1x

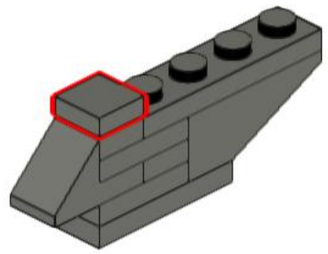

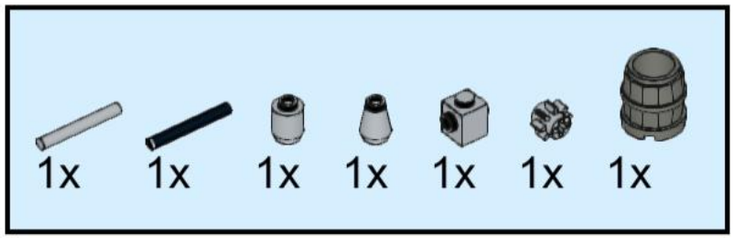
1x
1x
1x
1x
1x
1x
1x

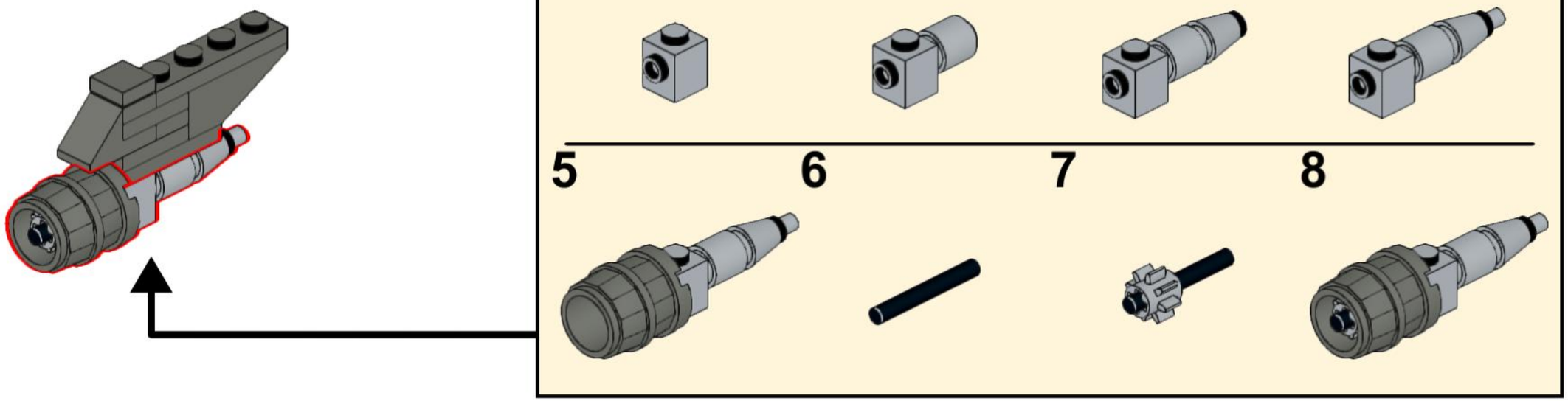
1
2
3
4
5
6
7
8

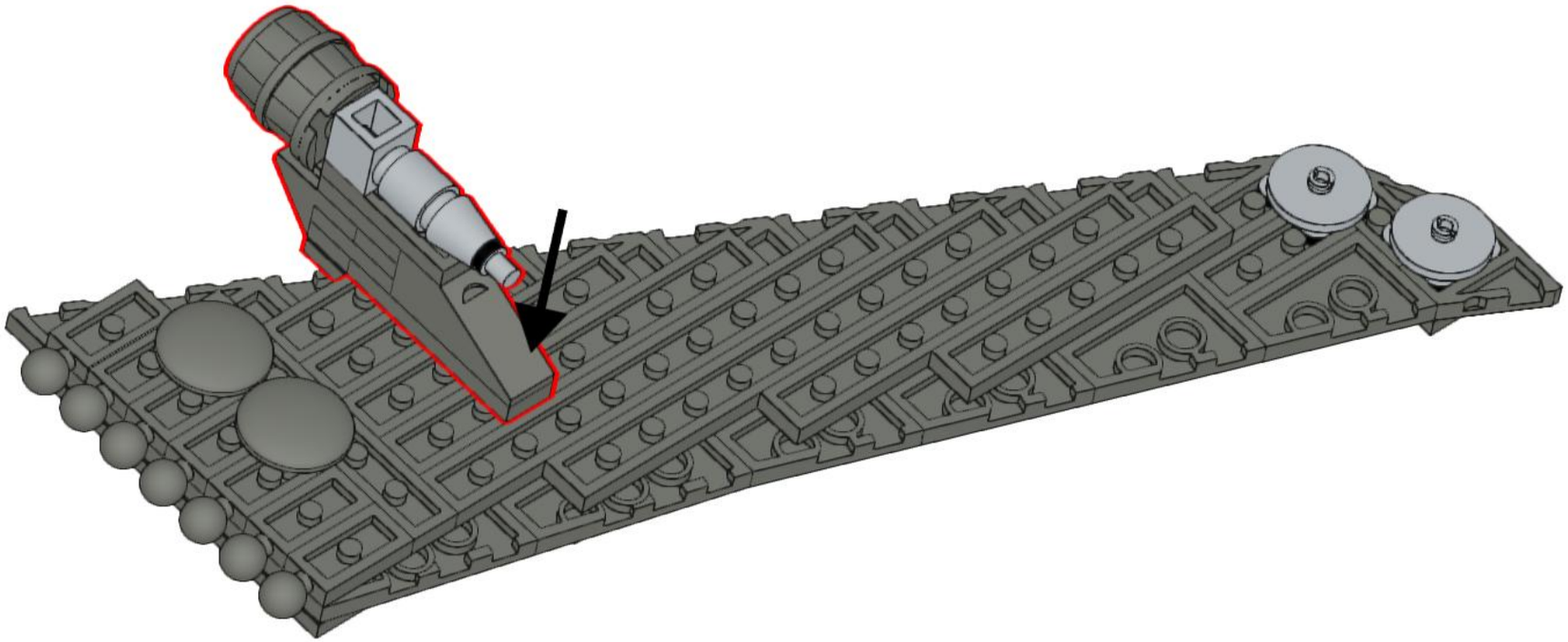

179

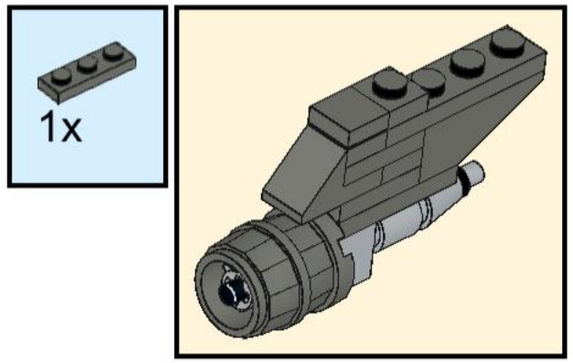

180

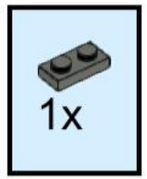

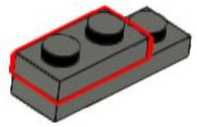

181

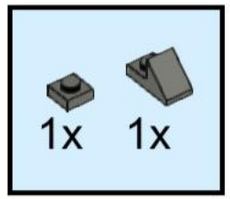

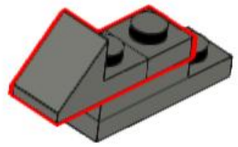

182

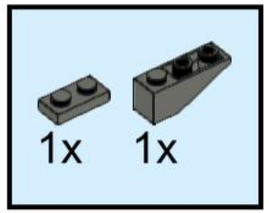

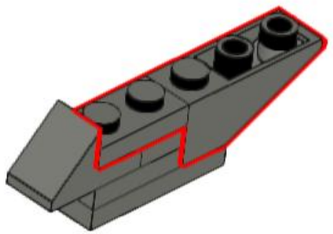

183

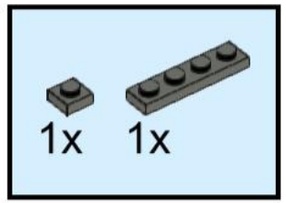

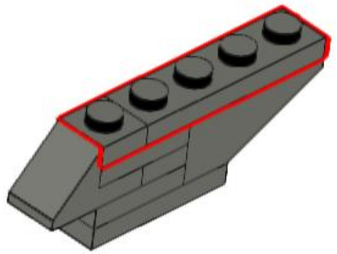

184

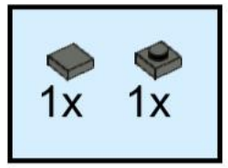

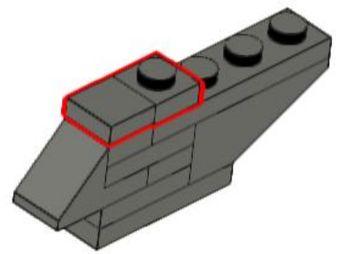

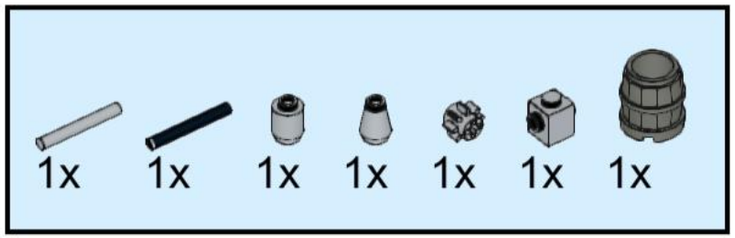
1x
1x
1x
1x
1x
1x
1x

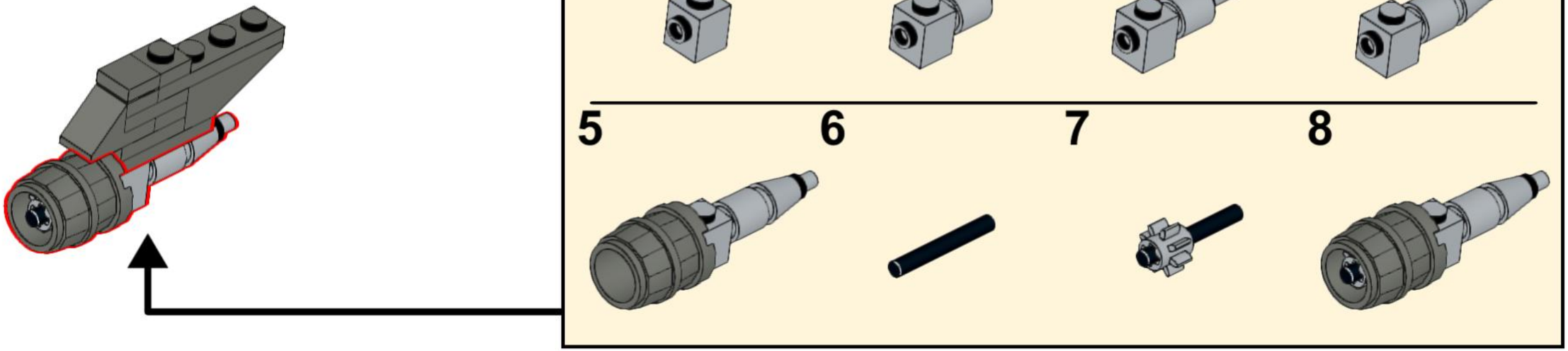
1
2
3
4
5
6
7
8

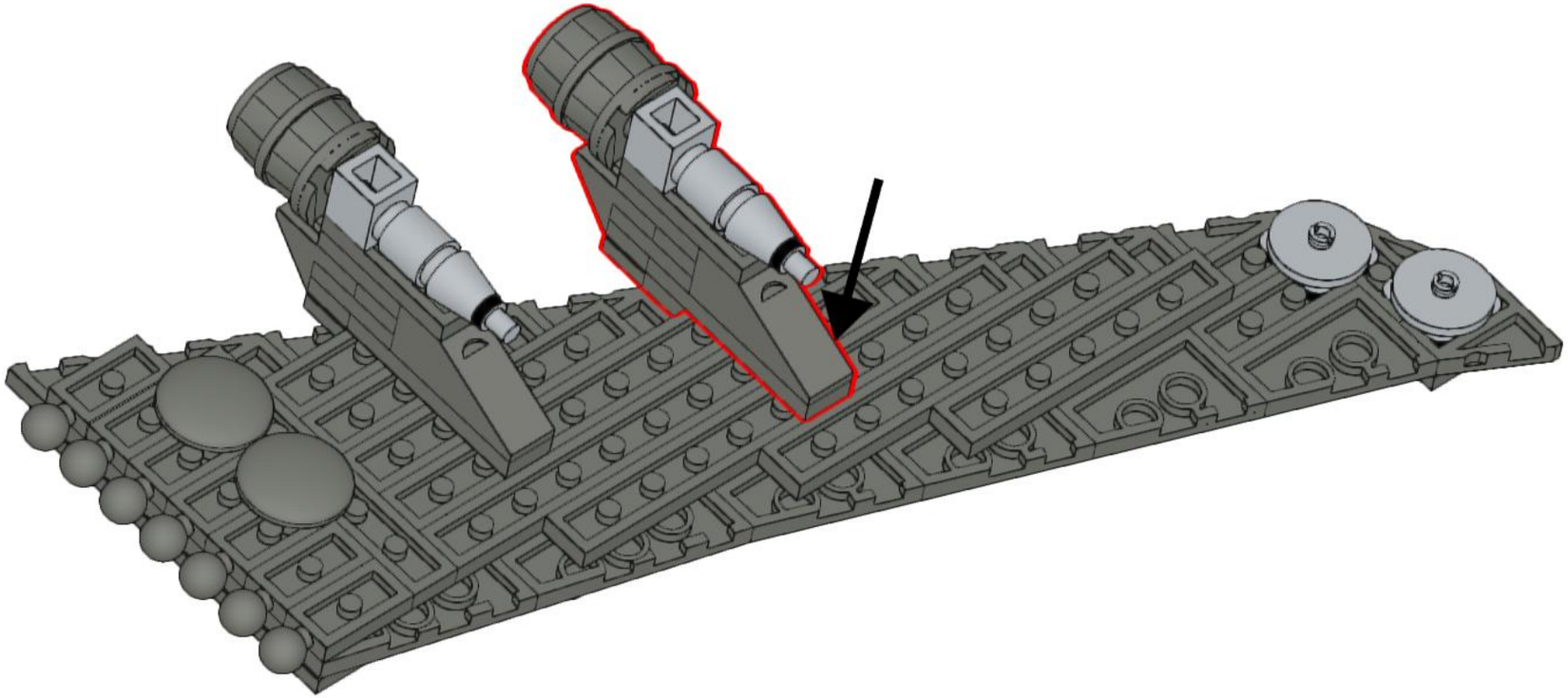

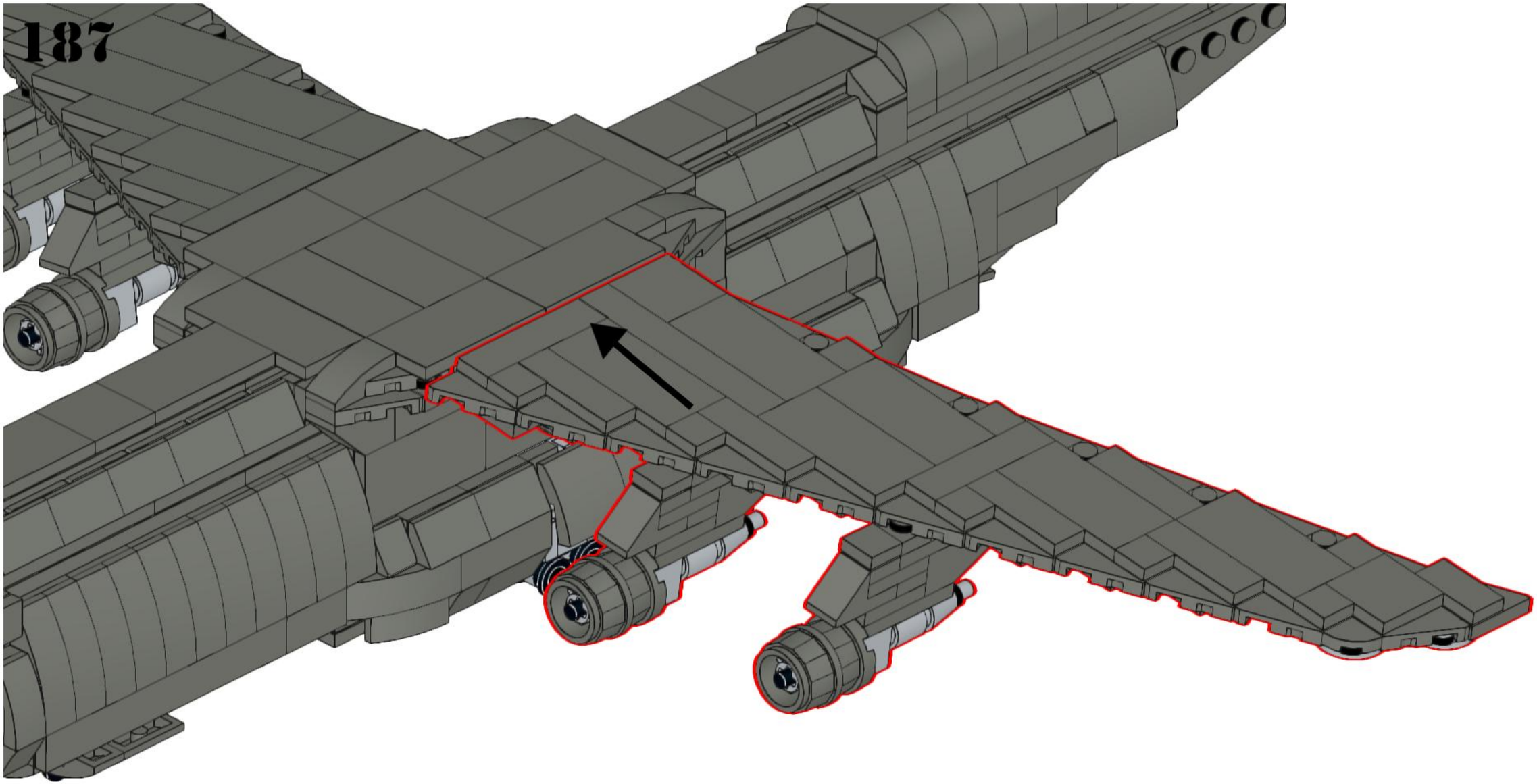

** Wings should have a slight downward angle.

188

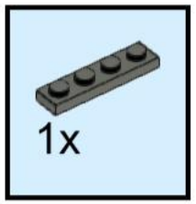

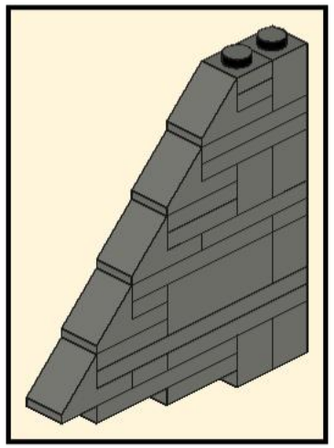

189

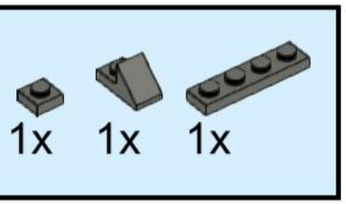

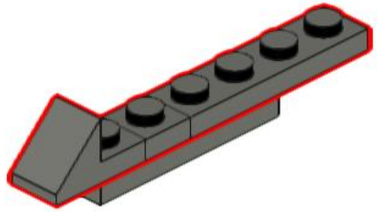

190

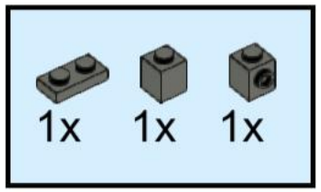

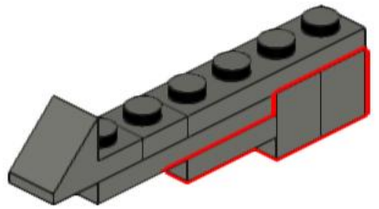

191

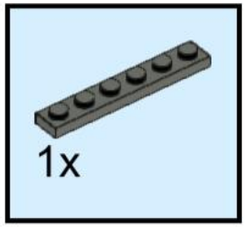

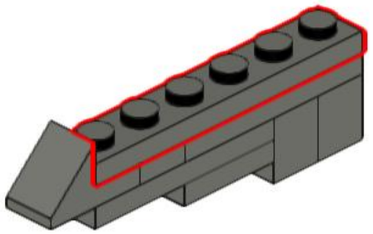

192

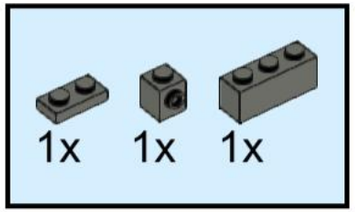

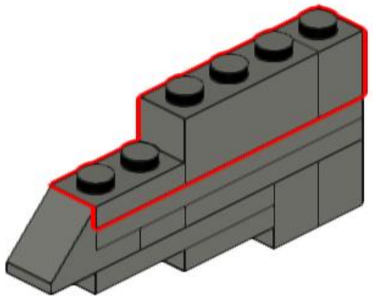

193

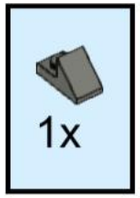

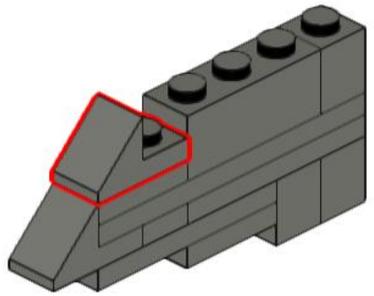

194

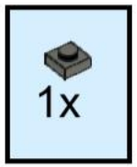

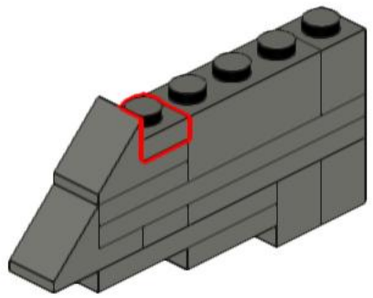

195

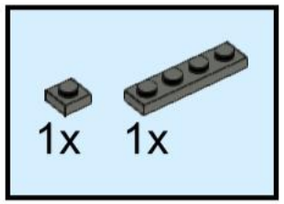

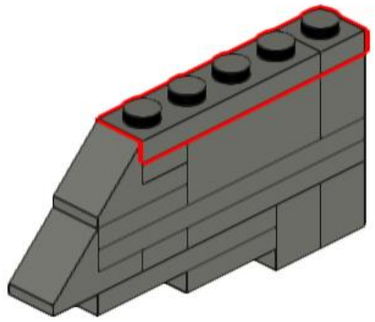

196

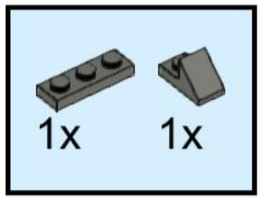

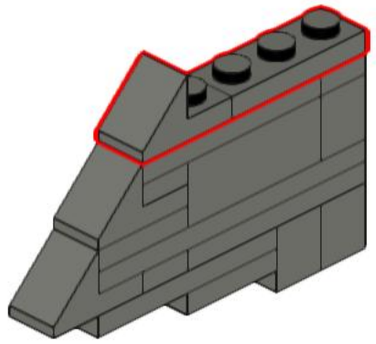

197

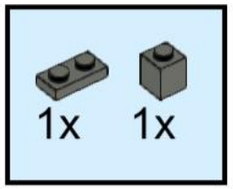

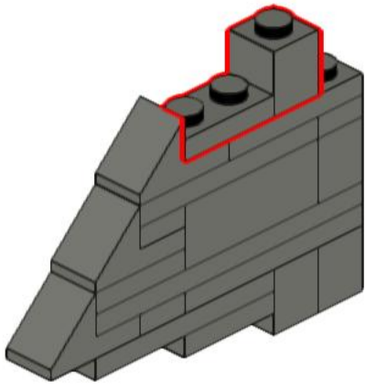

198

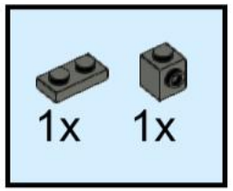

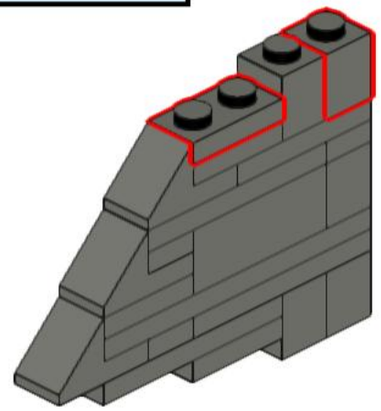

199

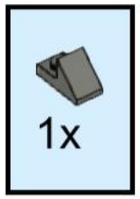

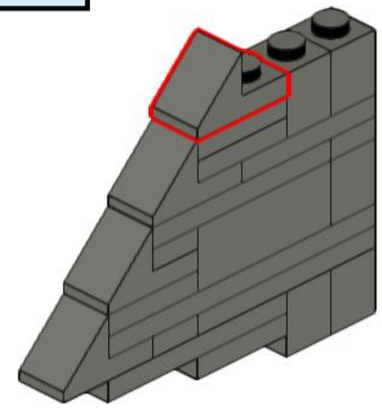

200

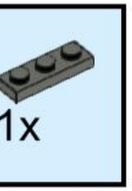

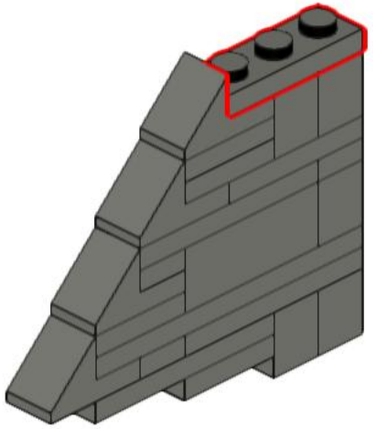

201

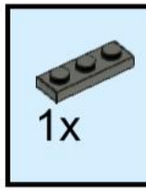

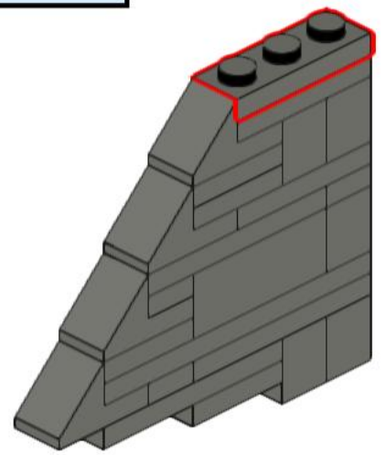

202

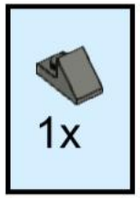

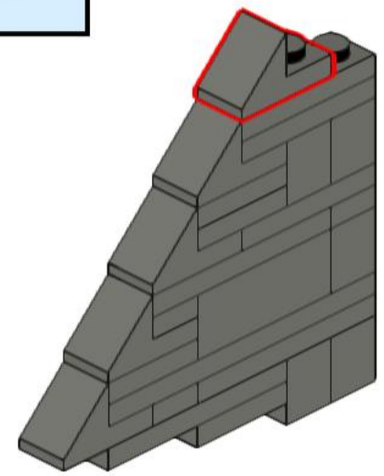

203

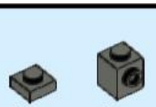

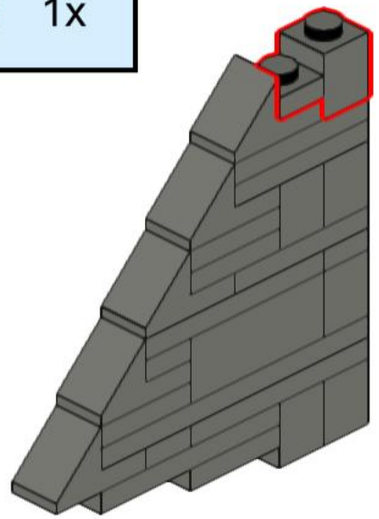

204

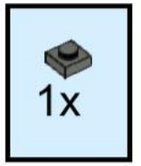

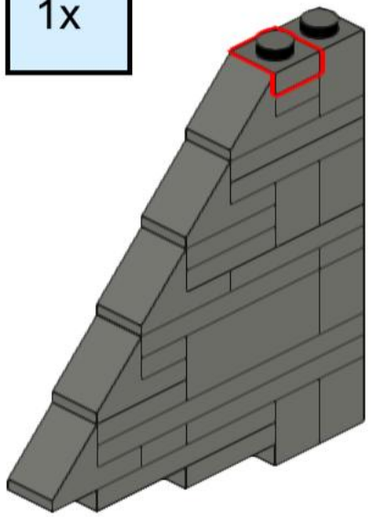

205

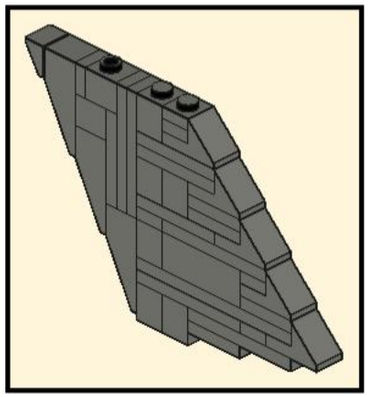

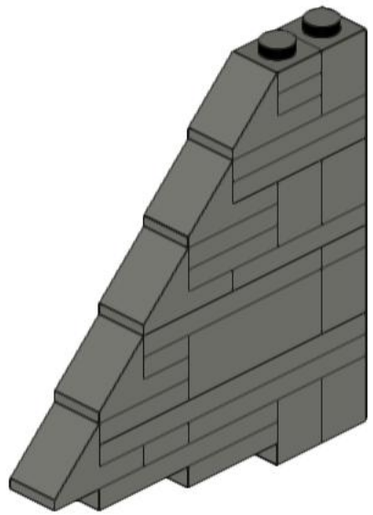

206

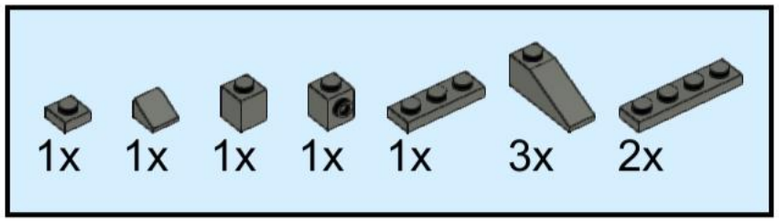

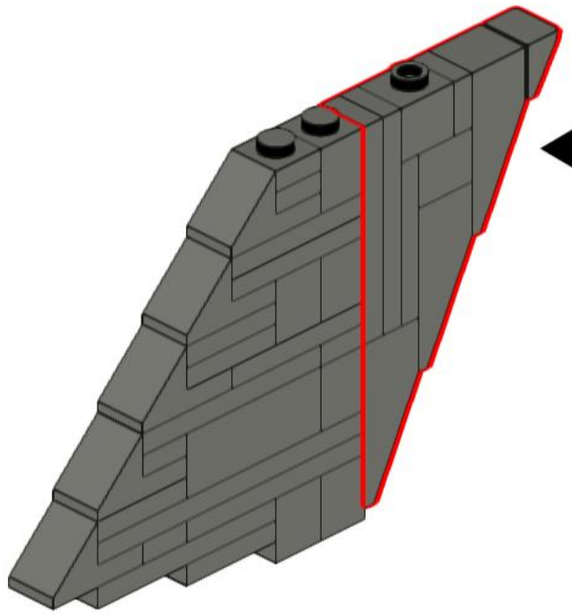

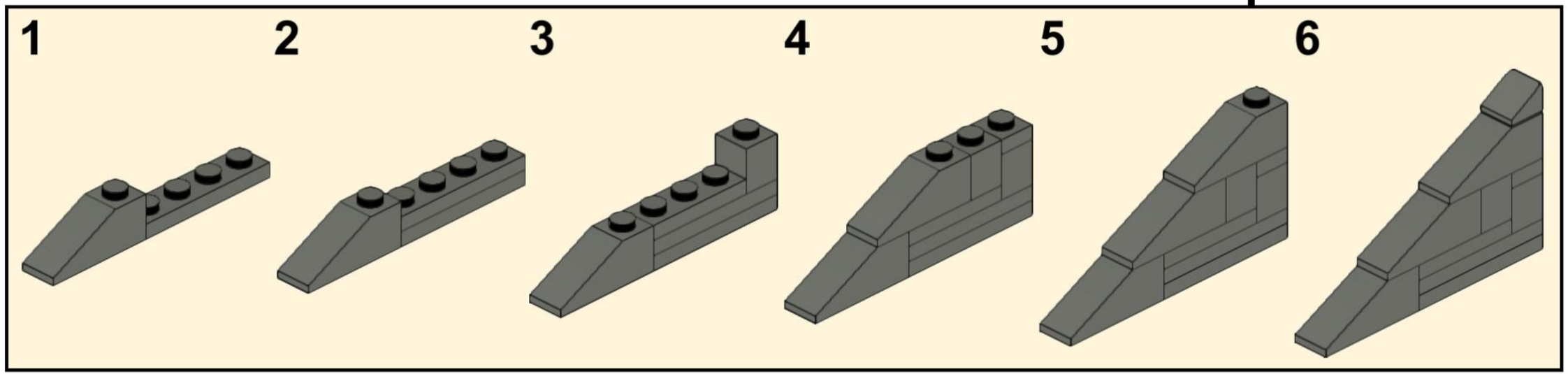

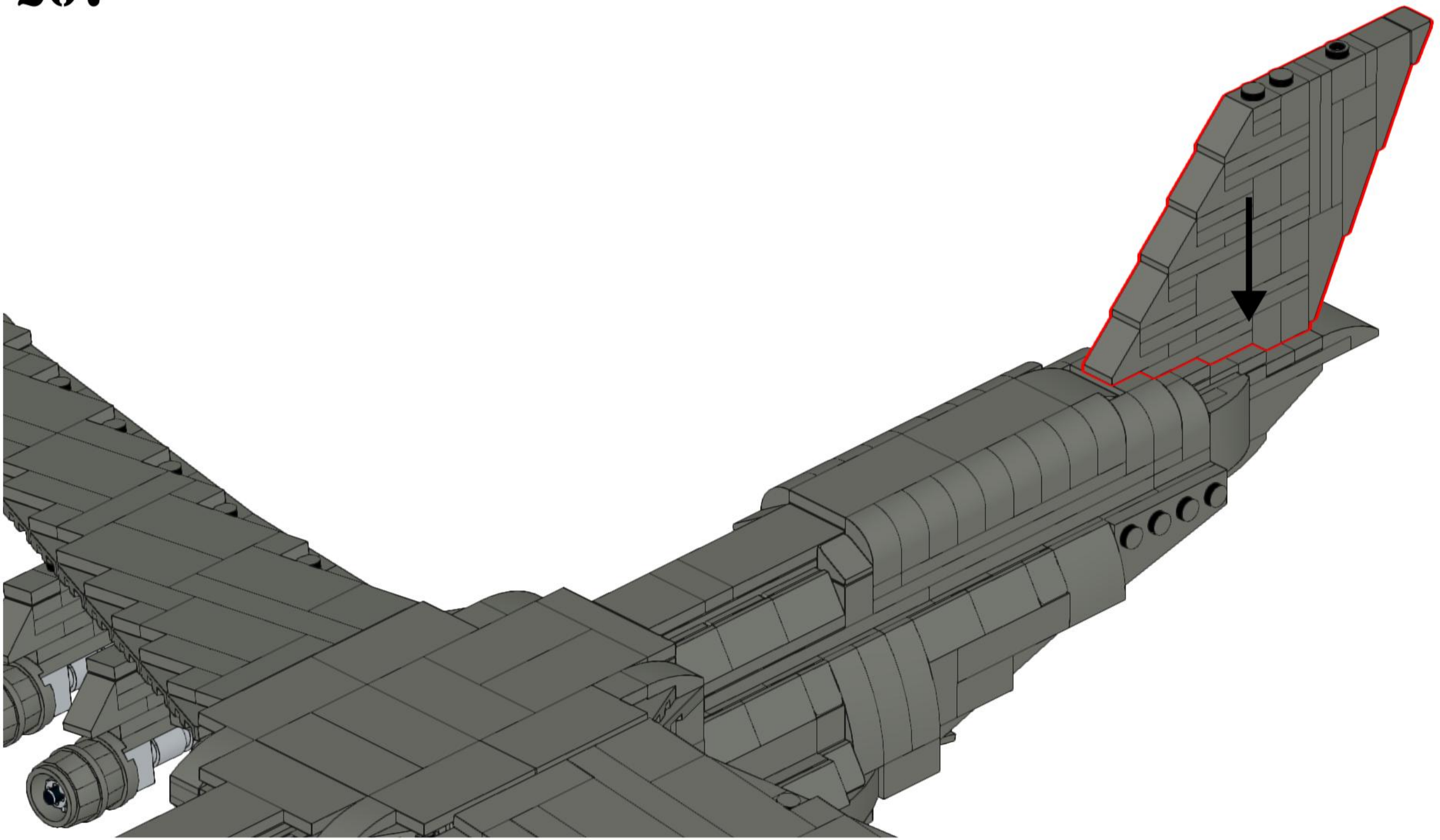

208

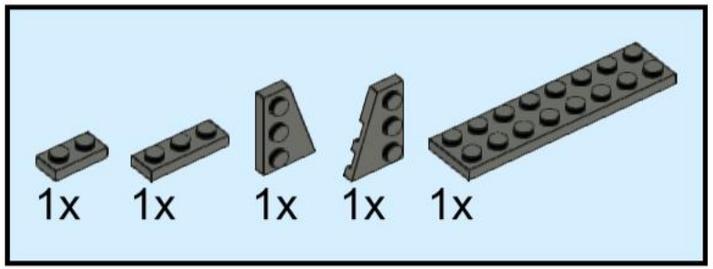

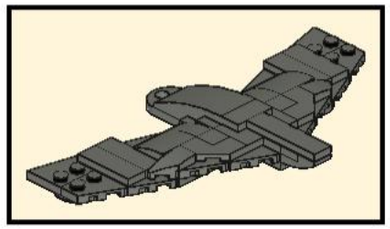

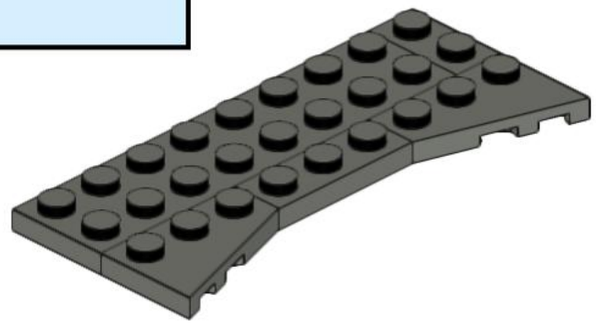

209

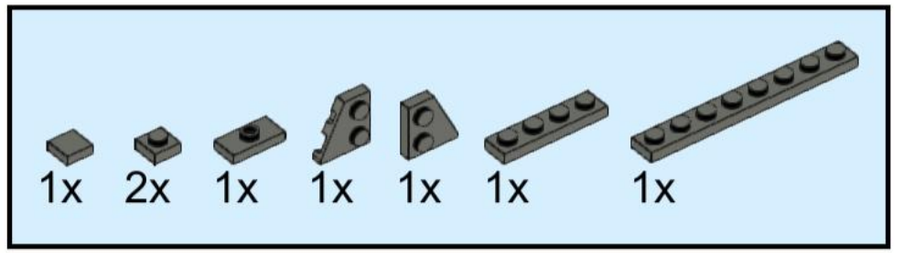

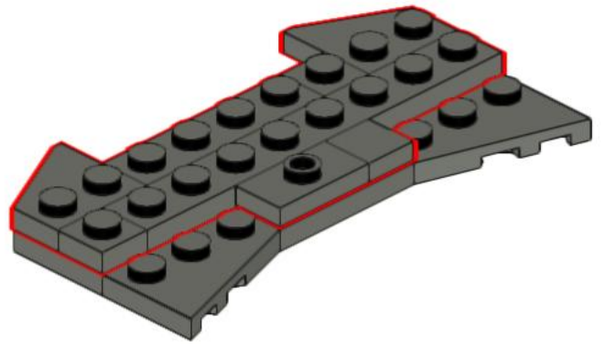

210

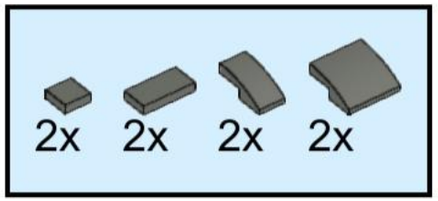

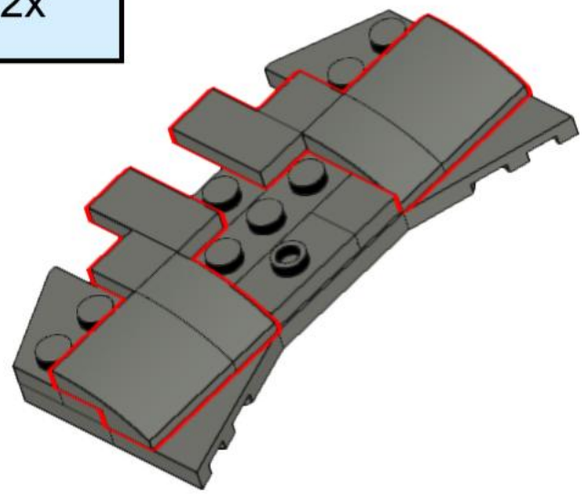

211

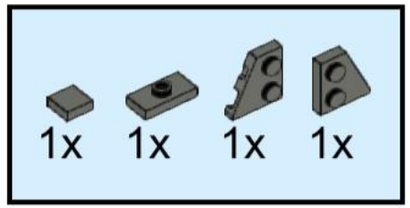

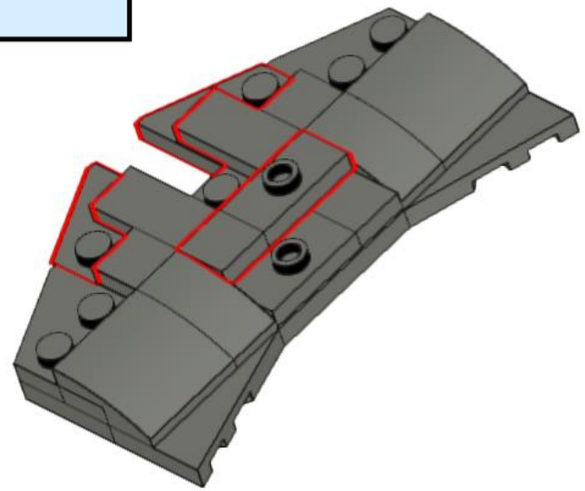

212

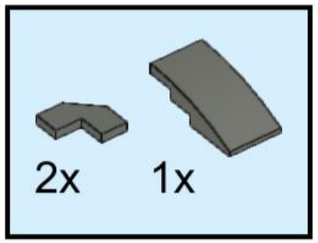

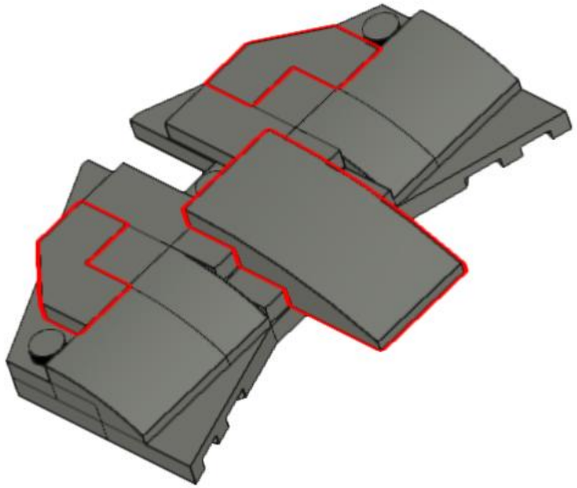

213

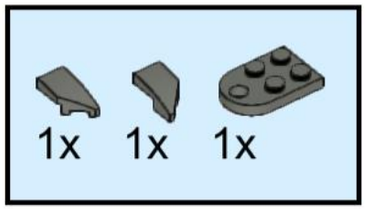

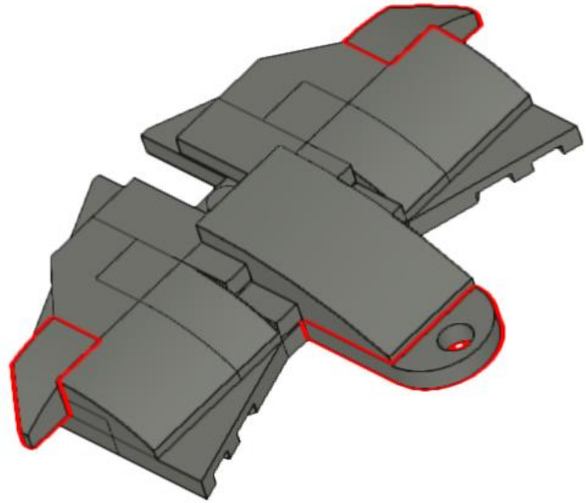

214

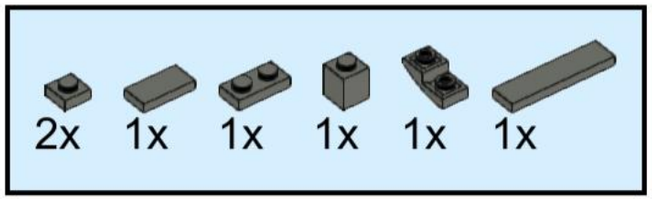

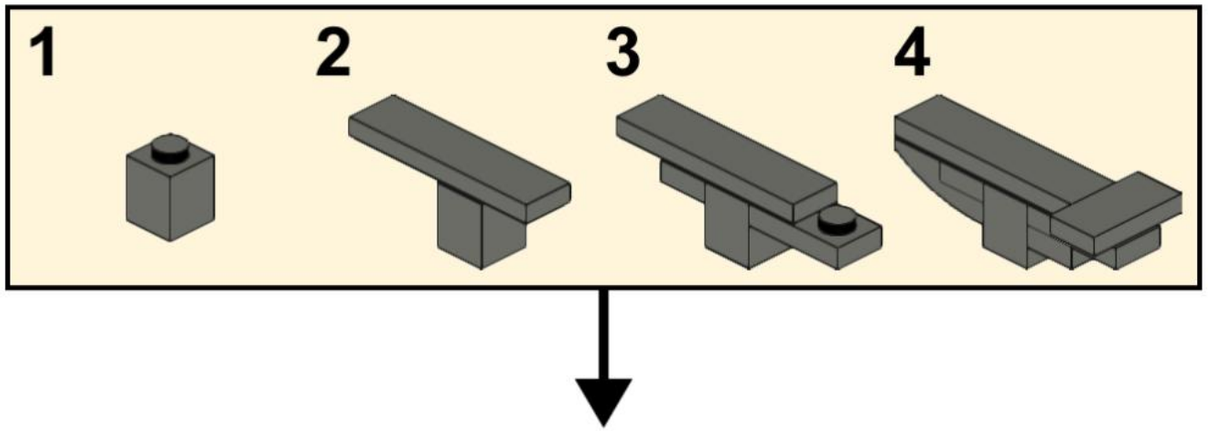

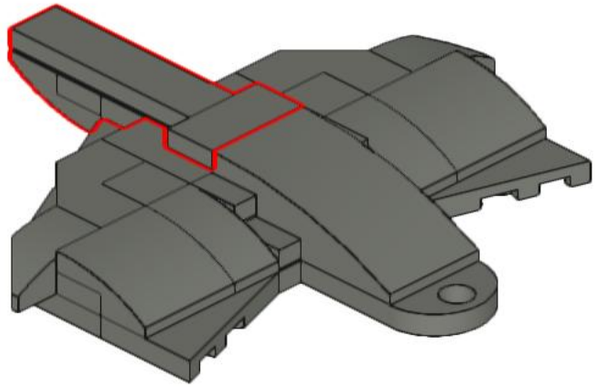

215

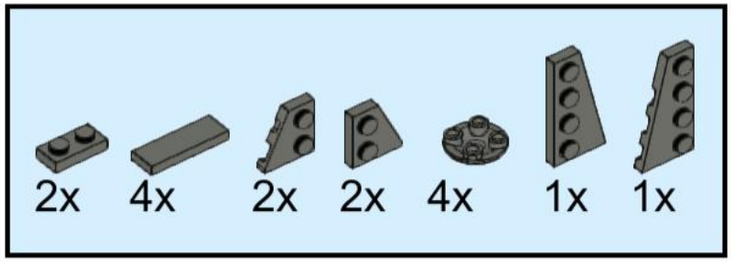

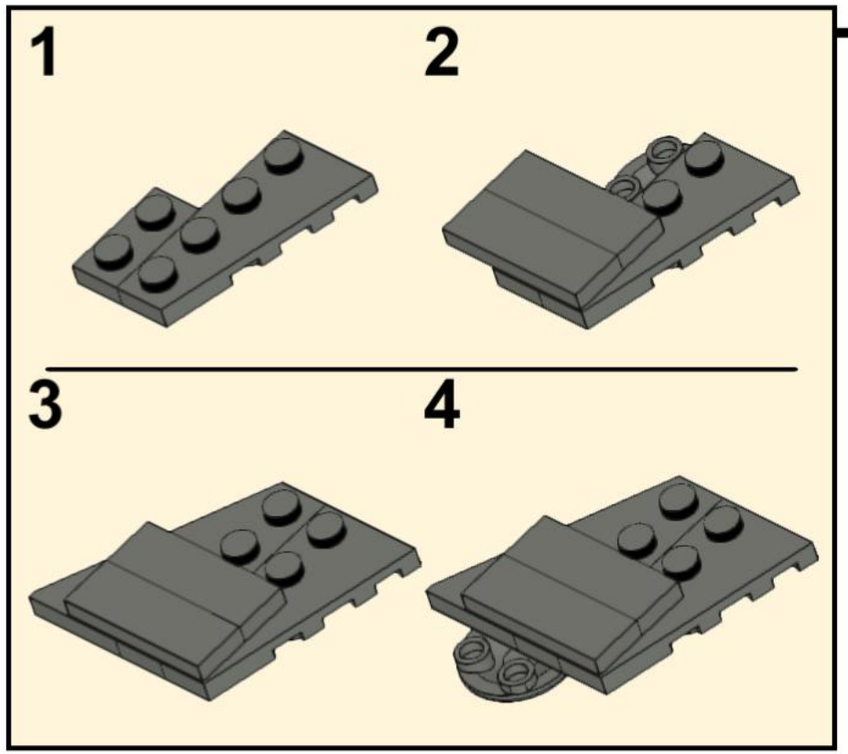

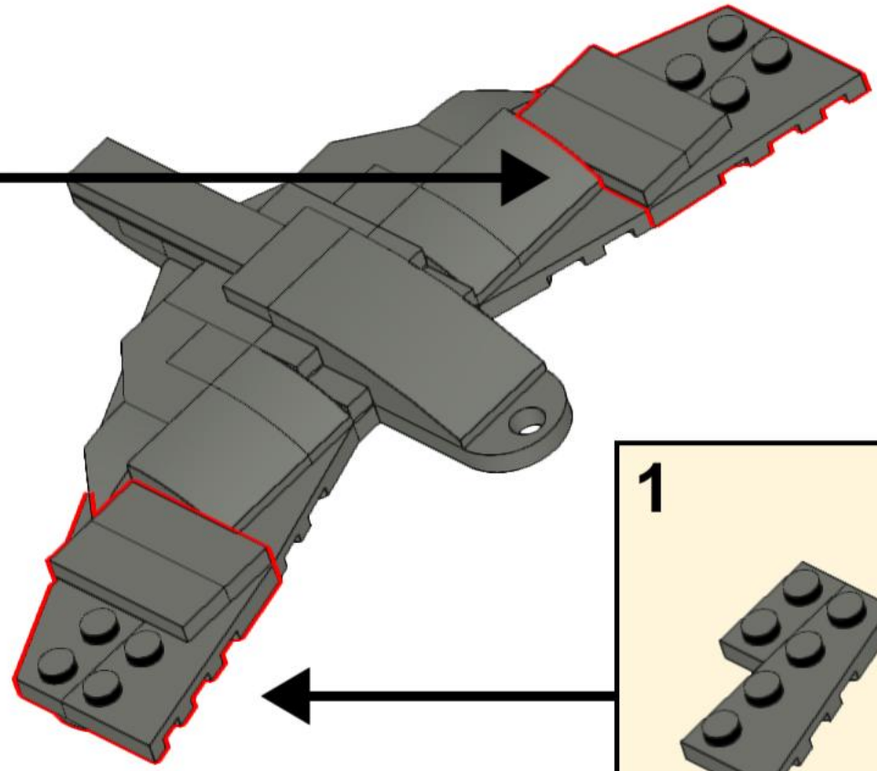

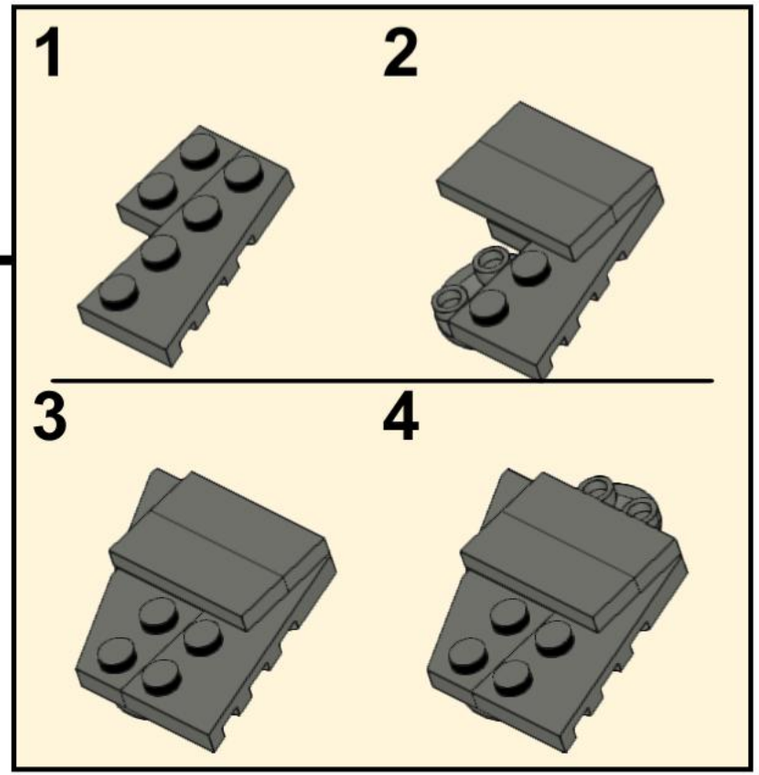

216

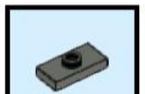

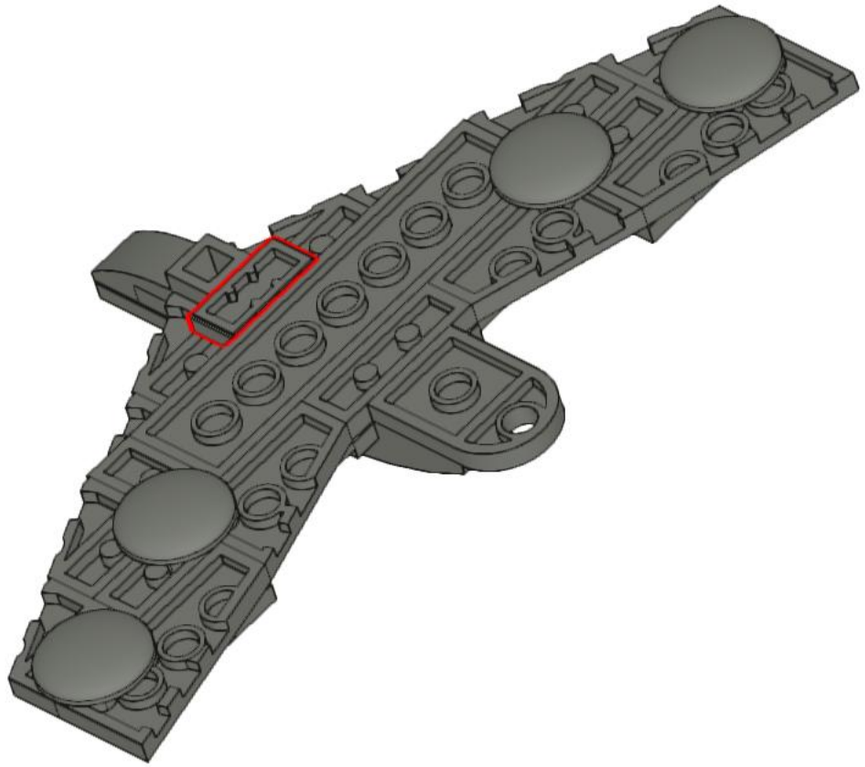

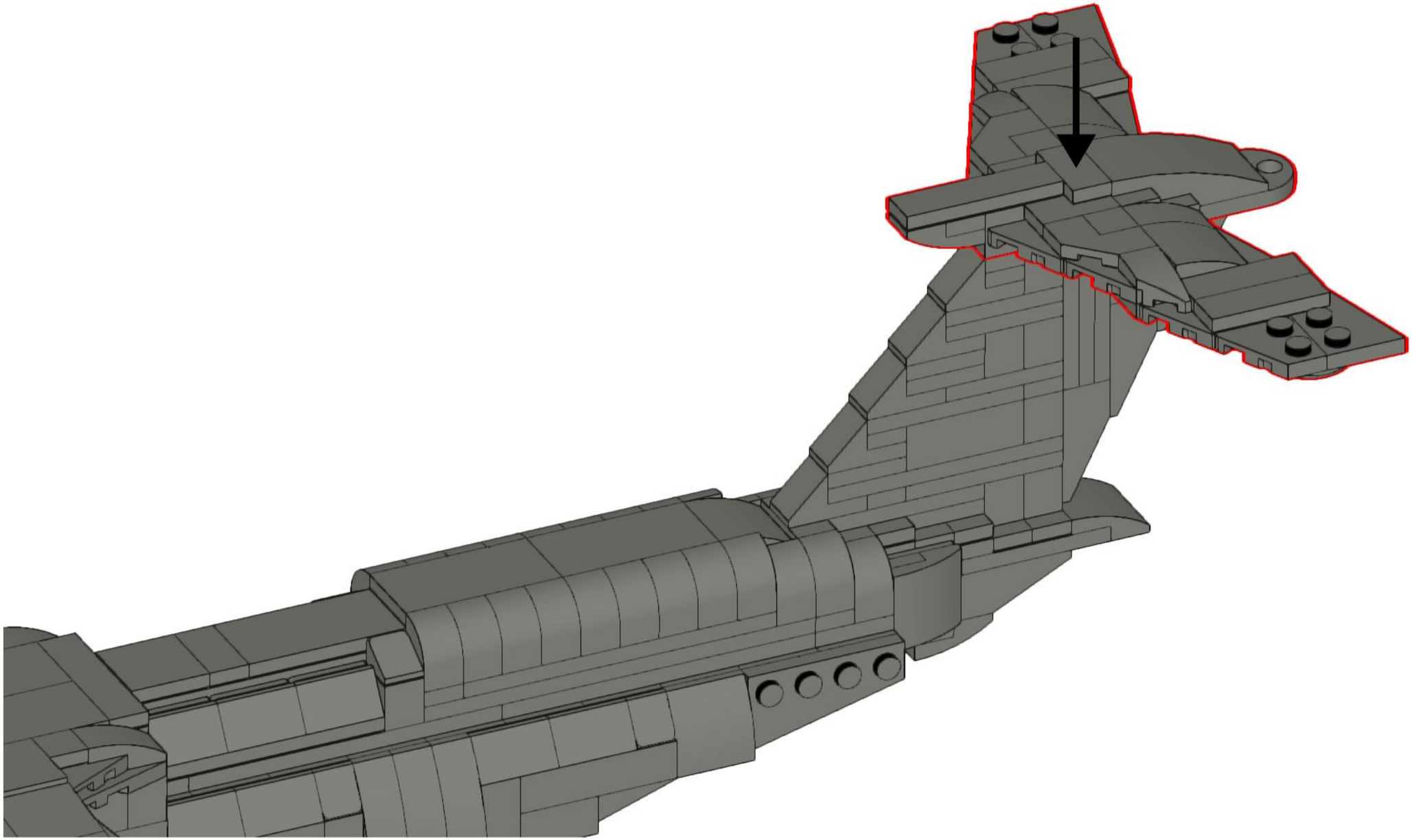

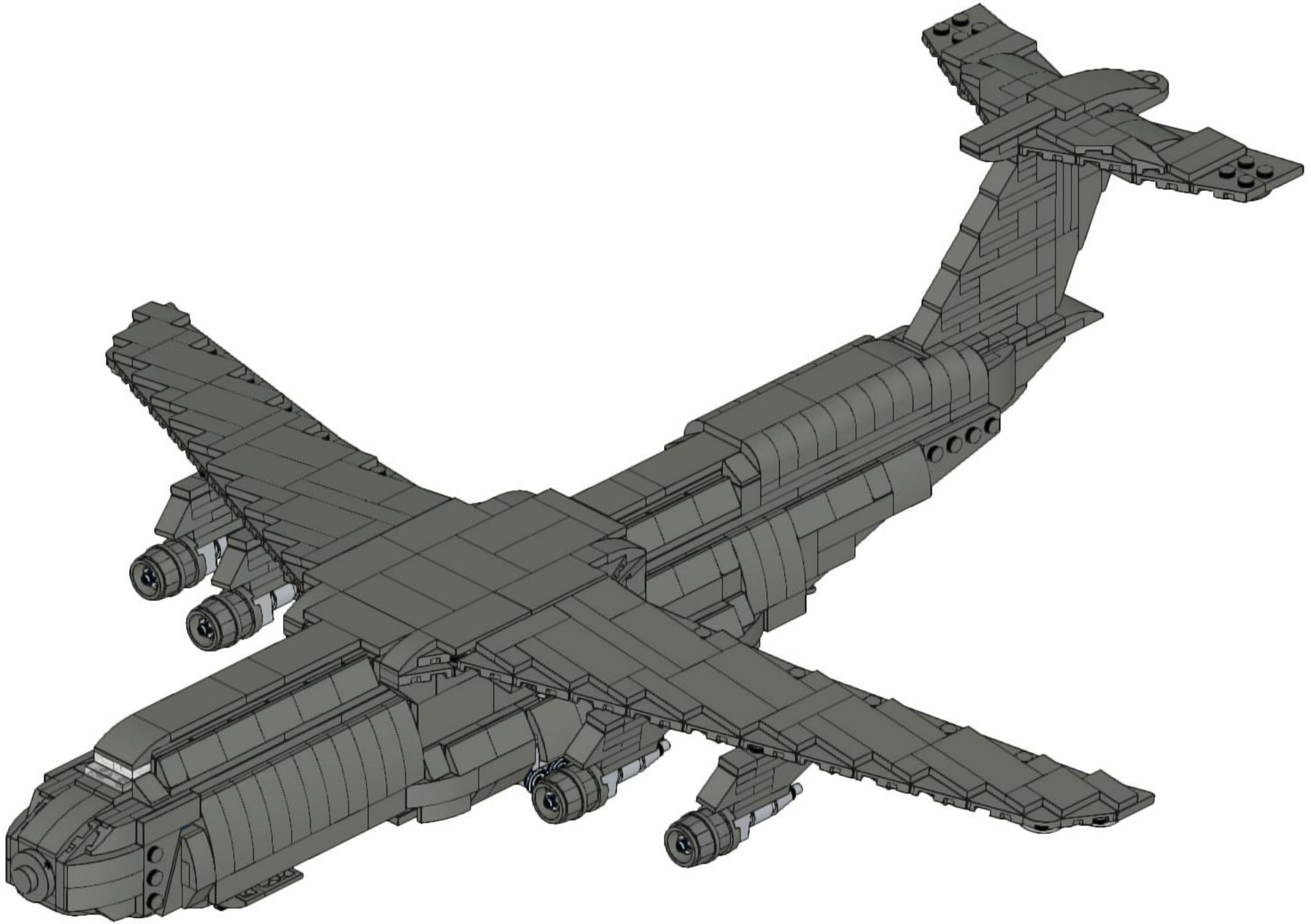

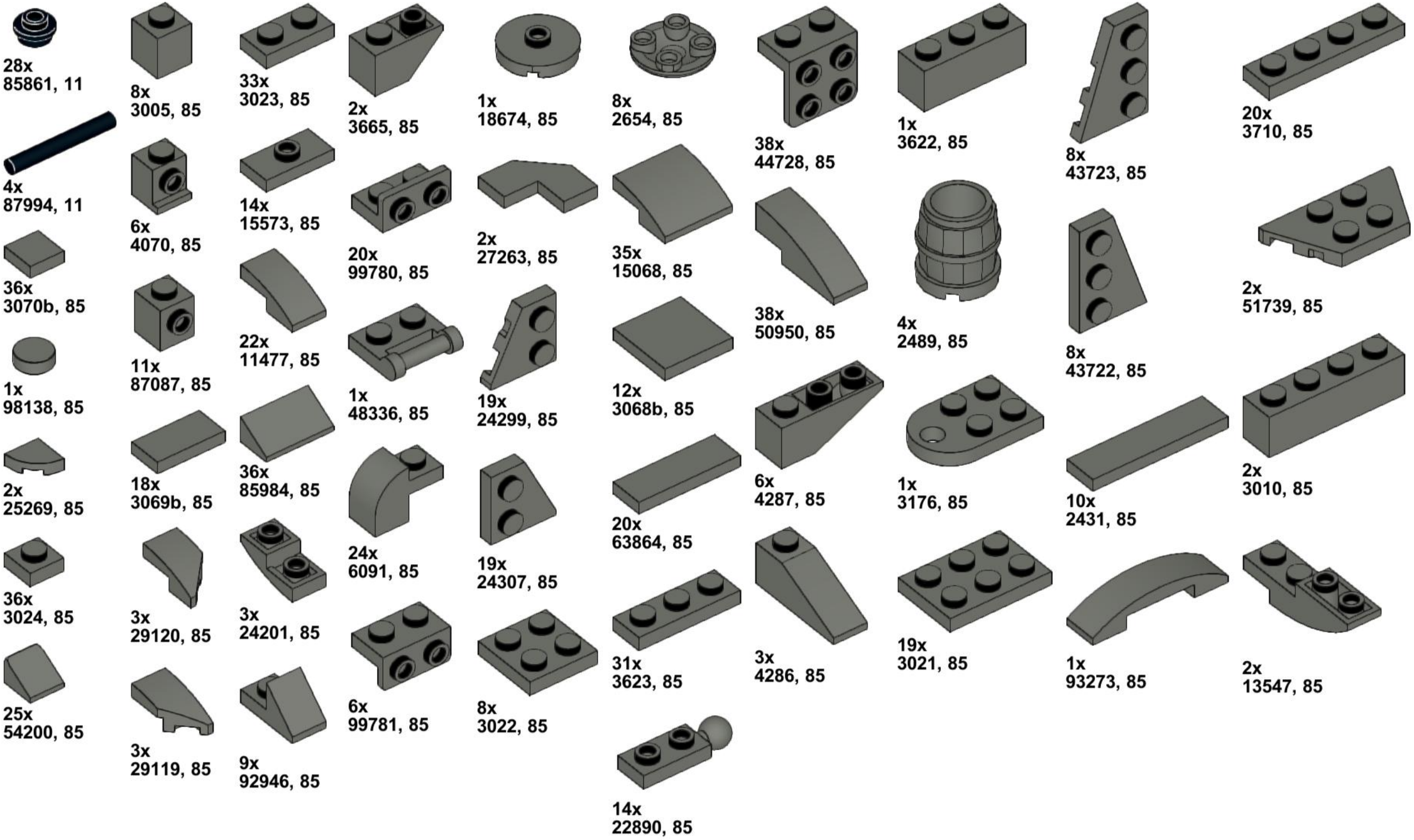
28x
85861, 11
4x
87994, 11
36x
3070b, 85
1x
98138, 85
2x
25269, 85
36x
3024, 85
25x
54200, 85
8x
3005, 85
6x
4070, 85
11x
87087, 85
18x
3069b, 85
3x
29120, 85
3x
29119, 85
33x
3023, 85
14x
15573, 85
22x
11477, 85
36x
85984, 85
3x
24201, 85
9x
92946, 85
2x
3665, 85
20x
99780, 85
1x
48336, 85
24x
6091, 85
6x
99781, 85
1x
18674, 85
2x
27263, 85
19x
24299, 85
19x
24307, 85
8x
3022, 85
8x
2654, 85
35x
15068, 85
12x
3068b, 85
20x
63864, 85
31x
3623, 85
14x
22890, 85
38x
44728, 85
38x
50950, 85
6x
4287, 85
3x
4286, 85
1x
3622, 85
4x
2489, 85
1x
3176, 85
19x
3021, 85
8x
43723, 85
8x
43722, 85
10x
2431, 85
1x
93273, 85
20x
3710, 85
2x
51739, 85
2x
3010, 85
2x
13547, 85

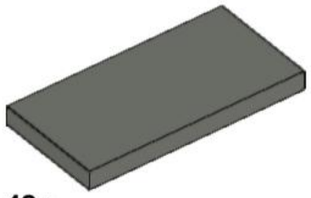

42x
87079, 85

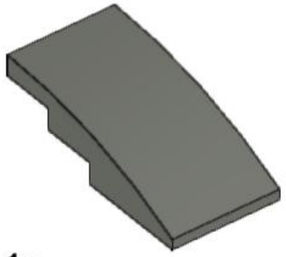

1x
93606, 85

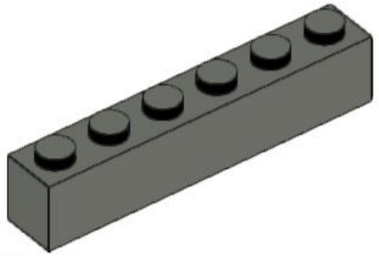

2x
3009, 85

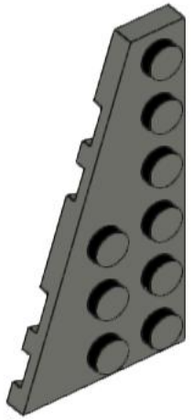

1x
54384, 85

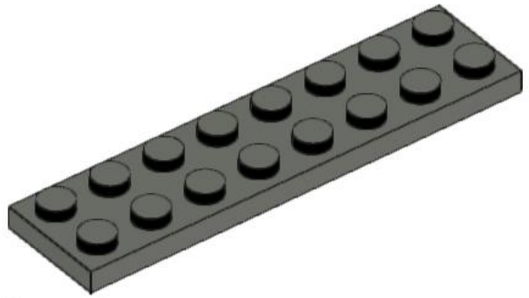

3x
3034, 85

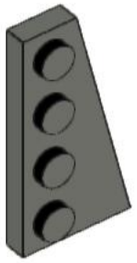

4x
41769, 85

4x
3031, 85

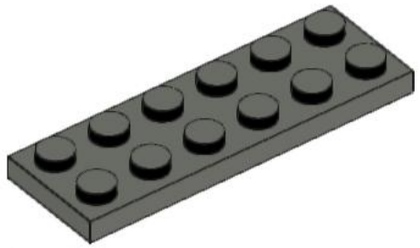

1x
3795, 85

6x
3020, 85

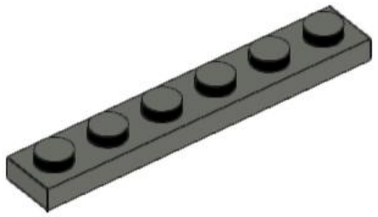

12x
3666, 85

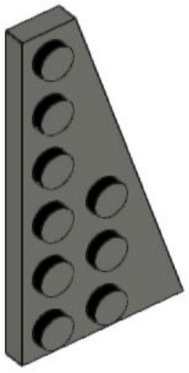

1x
54383, 85

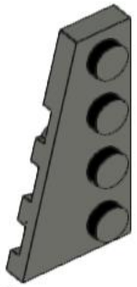

4x
41770, 85

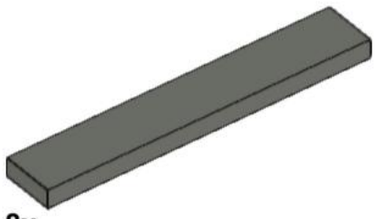

8x
6636, 85

10x
3460, 85

1x
3958, 85

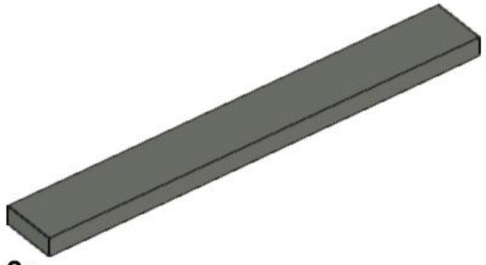

2x
4162, 85

5x
3035, 85

6x
4477, 85

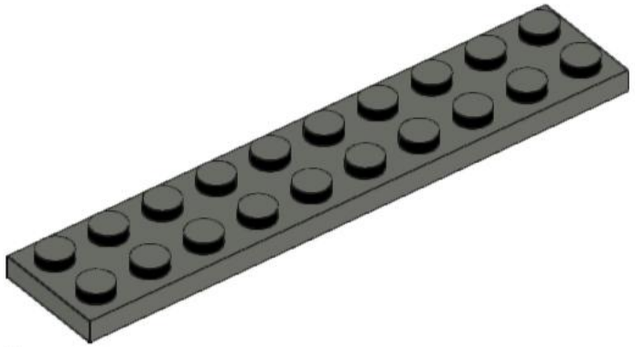

1x
3832, 85

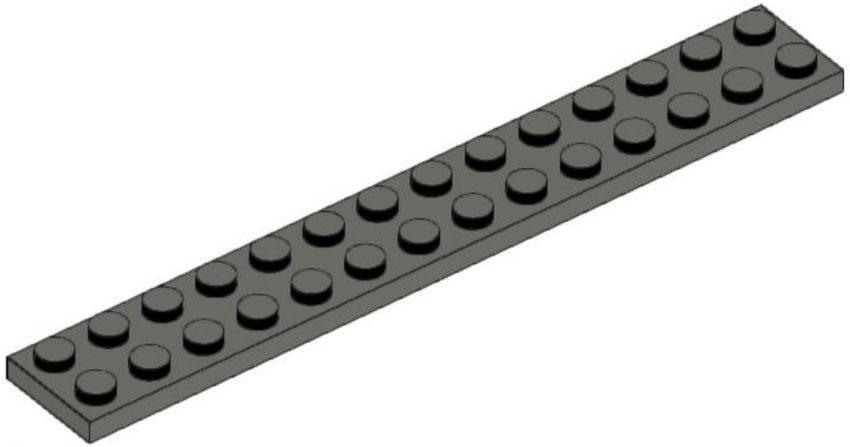

1x
91988, 85

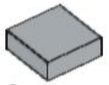

6x
3070b, 86

4x
4589b, 86

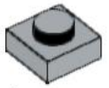

4x
3024, 86

4x
3062b, 86

1x
4073, 86

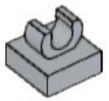

1x
15712, 86

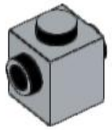

4x
47905, 86

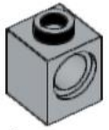

4x
6541, 86

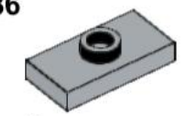

1x
15573, 86

4x
3647, 86

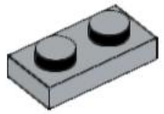

7x
3023, 86

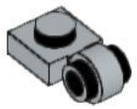

8x
4081b, 86

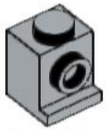

4x
4070, 86

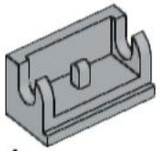

4x
3937, 86

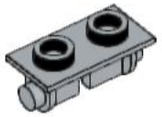

4x
3938, 86

4x
3679, 86

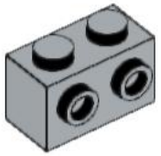

2x
11211, 86

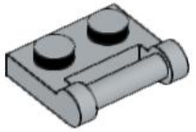

2x
48336, 86

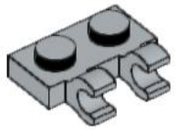

1x
60470b, 86

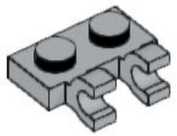

1x
60470, 86

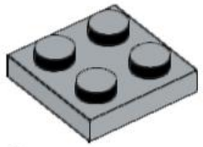

9x
3022, 86

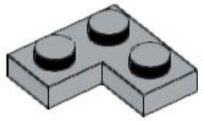

2x
2420, 86

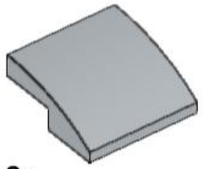

2x
15068, 86

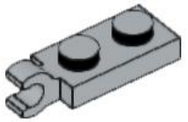

2x
63868, 86

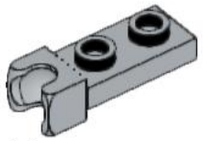

14x
14418, 86

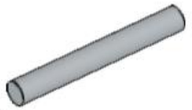

9x
87994, 86

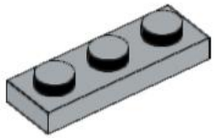

2x
3623, 86

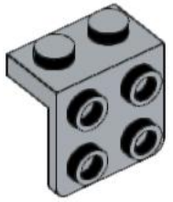

32x
44728, 86

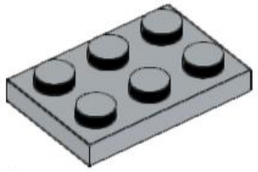

3x
3021, 86

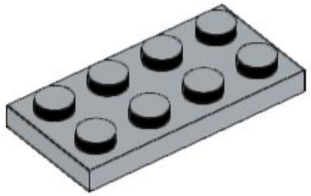

4x
3020, 86

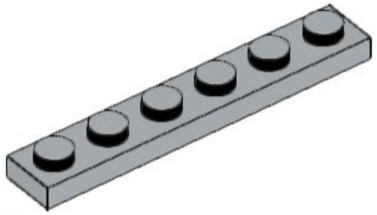

1x
3666, 86

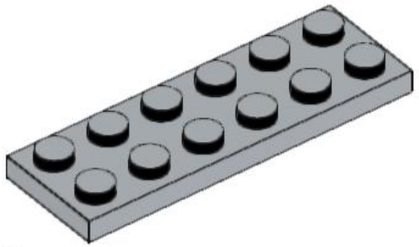

2x
3795, 86

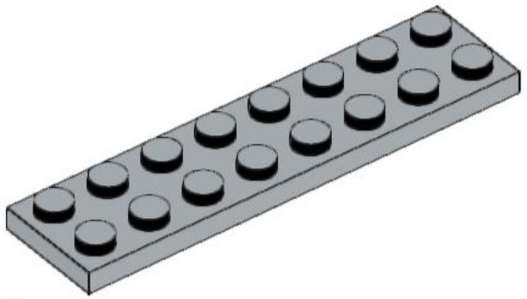

3x
3034, 86

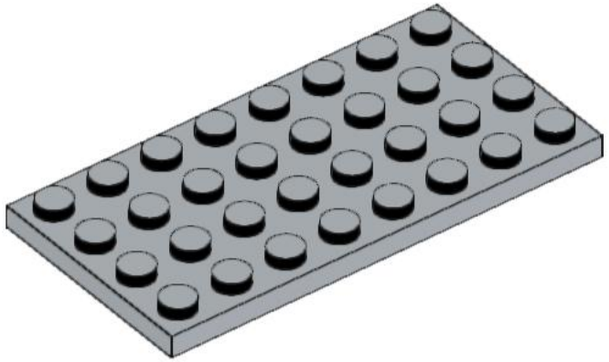

2x
3035, 86

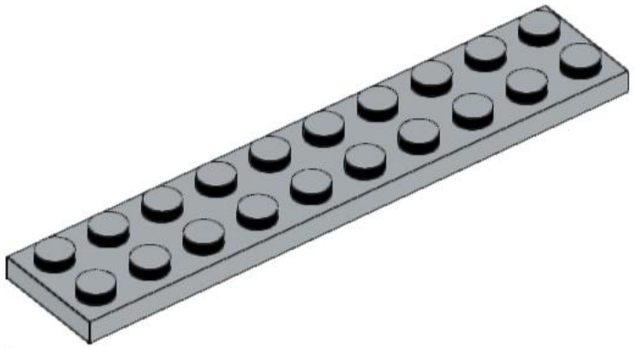

6x
3832, 86

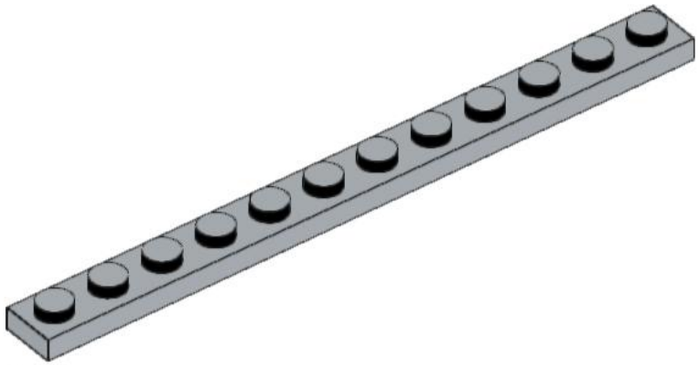

4x
60479, 86

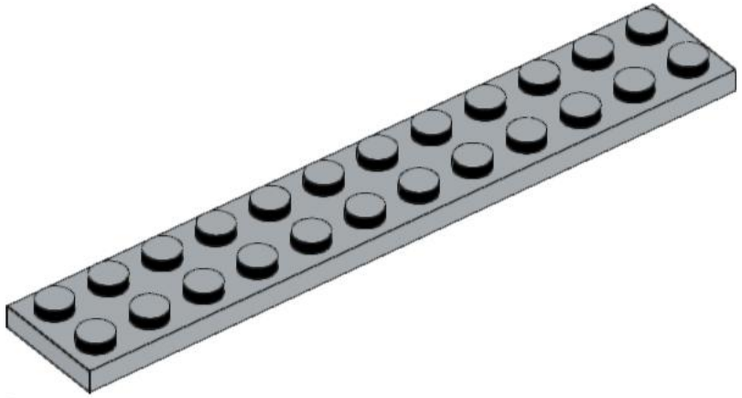

2x
2445, 86

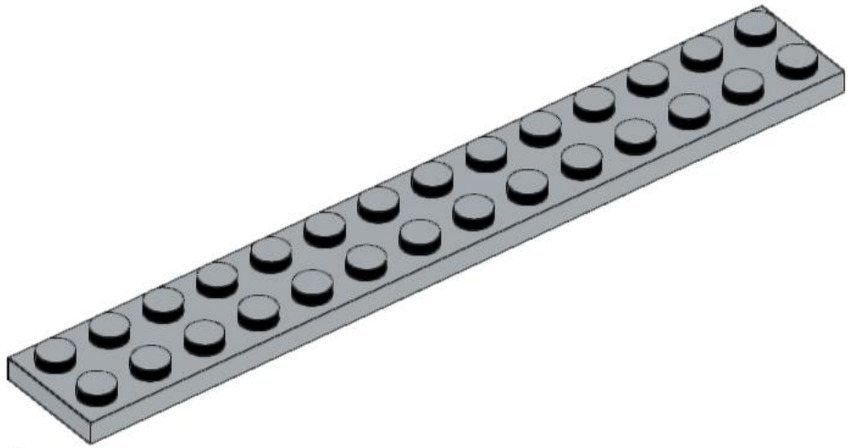

6x
91988, 86

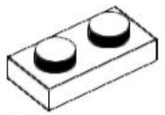

1x
3023, 1

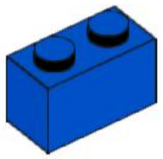

2x
3004, 7

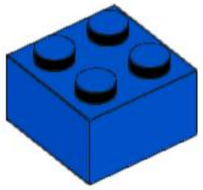

1x
3003, 7

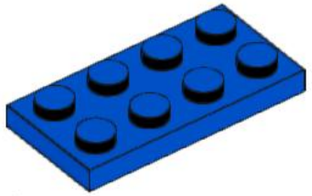

1x
3020, 7

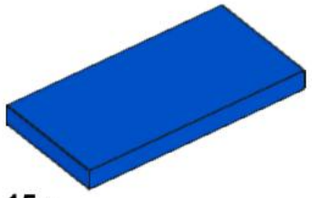

15x
87079, 7

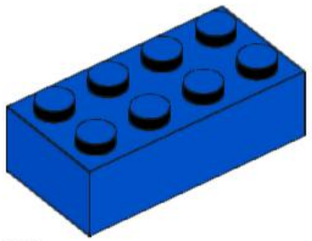

29x
3001, 7

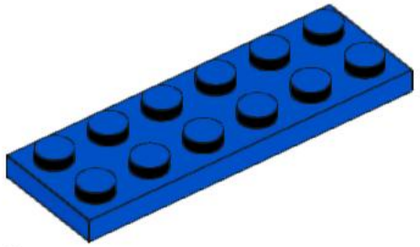

1x
3795, 7

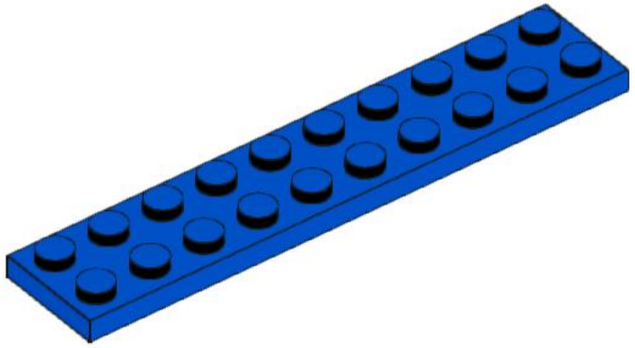

5x
3832, 7

1x
3069b, 12

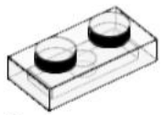

2x
3023, 12